NABEYA
http://www.nabeya.co.jp

No.214E

Friends

Nabeya General Catalog

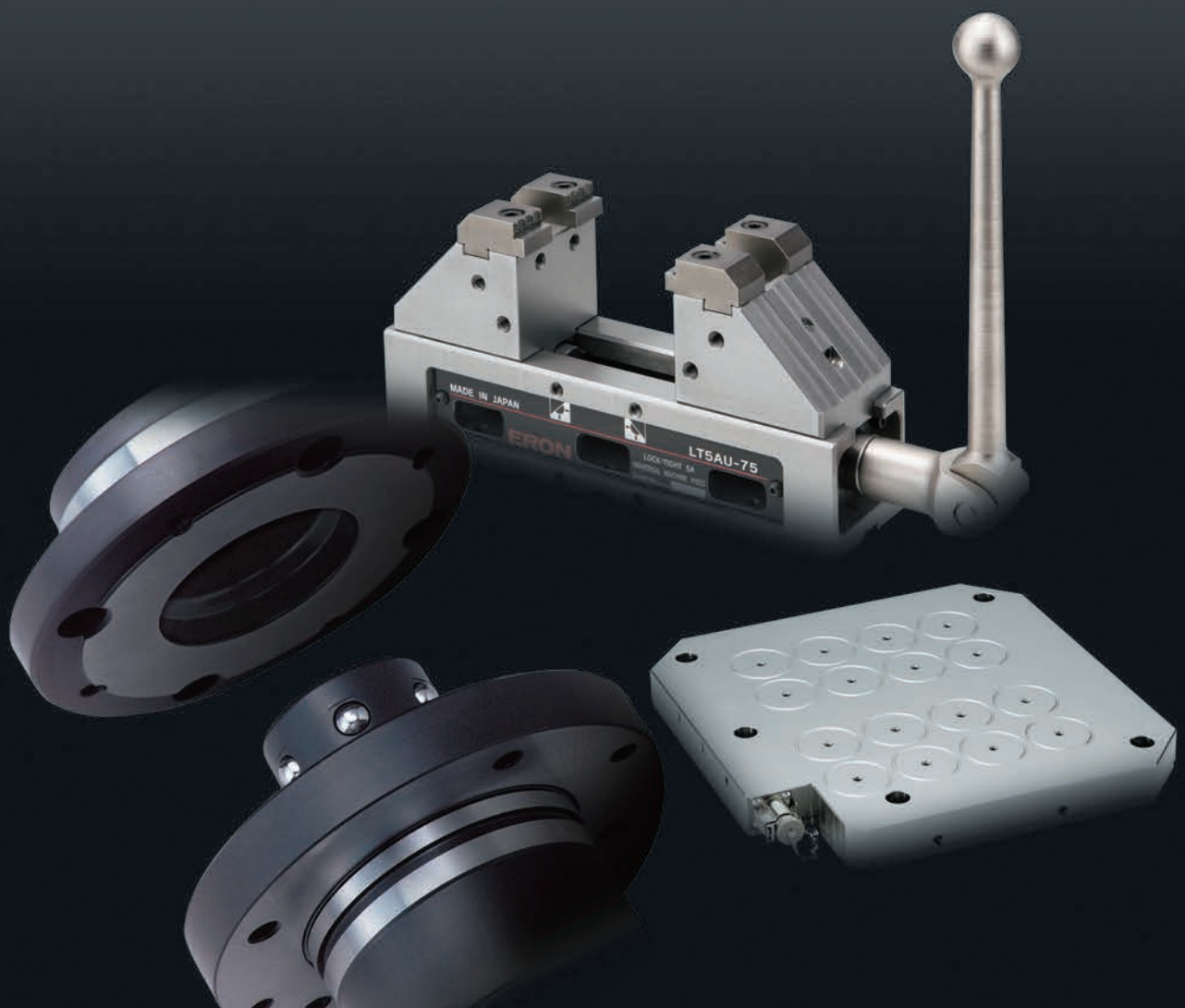

New Product Guide

Base Elements

Tooling Blocks

P.12

Completely revamped in order to respond to a wide range of customer needs with a wide range of variations including weight, shape, material, and product lines, changed specifications that keep up with the latest trends, and even bigger cost reductions!!

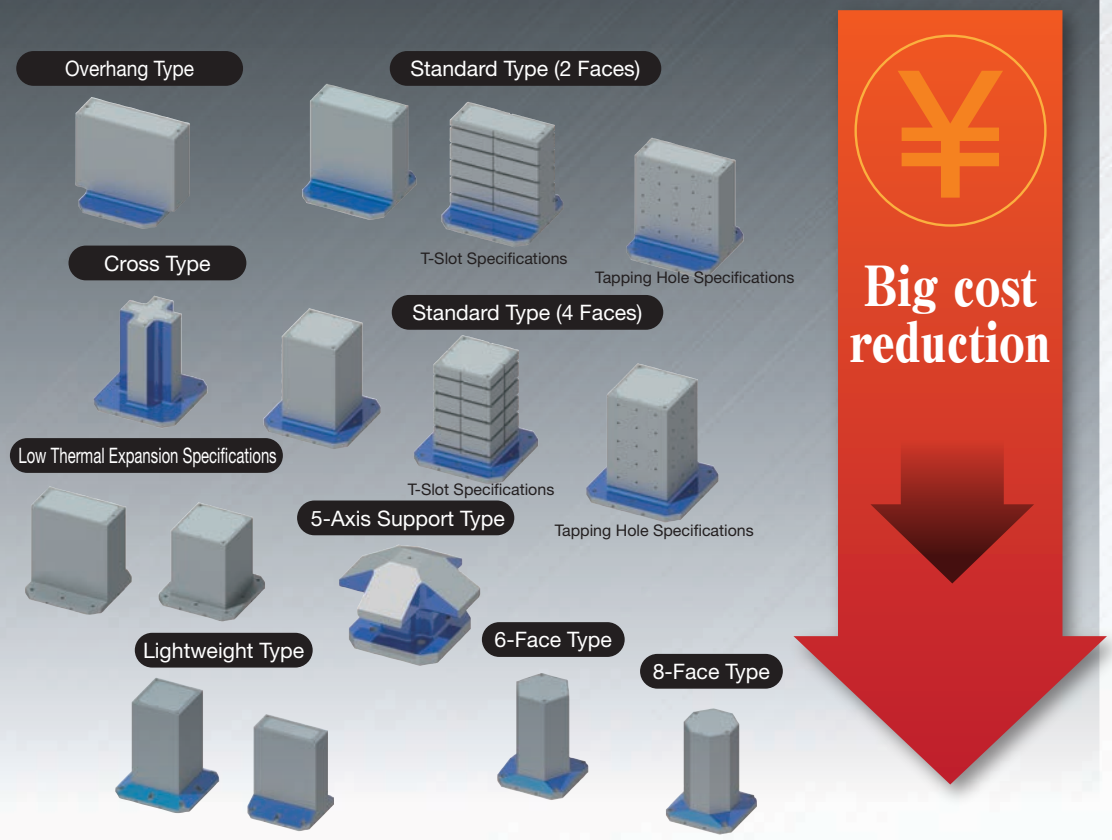

Q-Lock Elements

Screw Type Clutch Type

P.31

The main body of the Q-lock element has a built-in torque control mechanism, allowing you to use it without overtightening even when tightened using allen key.

Pneumatic Type

P.34

Air is used for clamping and unclamping. Automatic replacement of jigs is supported by changing the valve. A system can be built easily by using the air pipes within a factory.

Multi Auto Clamps

P.52

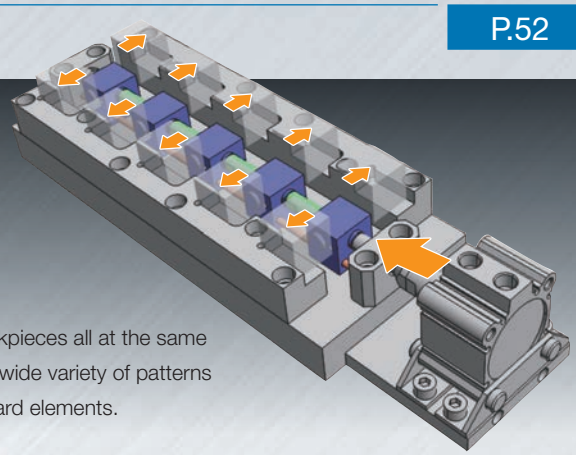

Able to clamp multiple workpieces at the same time with one action. Clamps that offer automation, labor-saving, and increased productivity.

The Multi Auto Clamp allows you to clamp multiple workpieces all at the same time by tightening at just a single location. Layouts in a wide variety of patterns can be accommodated through combinations of standard elements.

Vacuum Chucks

P.64

Optimal for clamping non-magnetic workpieces

Makes it possible to adsorb workpieces purely by supplying compressor air. Optimal for clamping non-magnetic workpieces such as aluminum, stainless steel, and copper which cannot be magnetically adsorbed.

Permanent Magnet MTB Magnetic Chucks For Milling

P.66

Delivers the strong clamping force needed for milling! Chips do not easily adhere to the workpiece

Milling requires powerful clamping force because the cutting thrust is not in a single direction. Powerful neodymium magnets are used for the magnetic poles of the magnetic chuck, producing a powerful clamping force of 6150 N (ϕ70 mm per 1 magnetic pole: in case of SS400).

Since the magnetism flows from the N magnetic pole to the S magnetic pole via the workpiece interior, chips do not adhere easily to the workpiece.

All metal surface

Easy attachment connector

Prevent infiltration by coolant oil

Contents

Contents

Base Elements

Product Name

Stock No.	Page

MC T-Slotted Angle Plates (T-Slot Type)
No.E-128M P.10

MC T-Slotted Angle Plates (T-Slot Type)
No.E-128M P.11

MC Tooling Blocks (2 Faces/Standard Type)
No.E-159 P.12

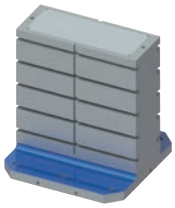

MC Tooling Blocks (2 Faces/Standard T-Slot Type)
No.E-159 P.14

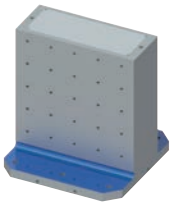

MC Tooling Blocks (2 Faces/Standard Tapped Holes Type)
No.E-159 P.15

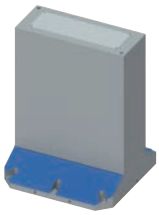

MC Tooling Blocks (2 Faces/Light Weight Type)
No.E-159L P.16

MC Tooling Blocks (4 Faces/Standard Type)
No.E-159 P.18

MC Tooling Blocks (4 Faces/Standard T-Slot Type)
No.E-159 P.20

MC Tooling Blocks (4 Faces/Standard Tapped Holes Type)
No.E-159 P.21

MC Tooling Blocks (4 Faces/Light Weight Type)
No.E-159L P.22

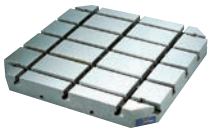

MC Pallet Sub Tables (T-Slot Type)
No.E-169 P.24

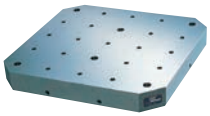

MC Pallet Sub Tables (Tapped Holes Type)
No.E-169 P.25

MC Machine Sub-Plates
No.E-162 P.26

Clamping Sets
No.E-423S P.27

Q-Lock Elements/Pins (Screw Type) (Standard and Quick Type)
No.E-659C P.31

Q-Lock Elements/ Pins (Screw Type)(Side Operation Type)
No.E-659C P.32

Q-Lock Elements/Pins (Screw Type) (Clutch Type)
No.E-659C P.32

Q-Lock Elements/ Pins (Pneumatic Type)
No.E-659C P.34

Q-Lock Elements/Bushes (Screw Type and Pneumatic Type)
No.E-659C P.35

Q-Lock Elements/ Pins (Hydraulic Type Single Action)
No.E-659C P.36

Q-Lock Elements/ Pins (Hydraulic Type Double Action)
No.E-659C P.38

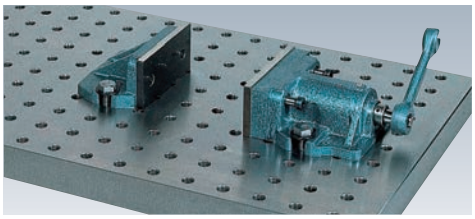

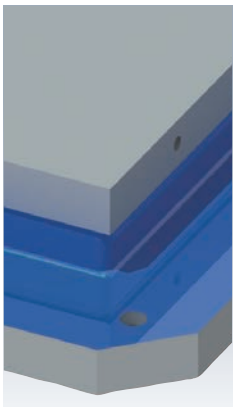

Q-Lock Elements/
Bushes (Hydraulic Type)

No.E-659C P.40

Height Cylinders
for Q-Lock Elements

No.E-659HC P.41

2 Faces/MC Tooling Blocks
with Q-Lock Elements

No.E-659 P.42

Attachment Plates
with Q-Lock Elements

No.E-659P P.43

4 Faces/MC Tooling Blocks
with Q-Lock Elements

No.E-659 P.44

Attachment Plates
with Q-Lock Elements

No.E-659P P.45

Contents

Contents

Clamp Units

Product Name
Stock No. | Page

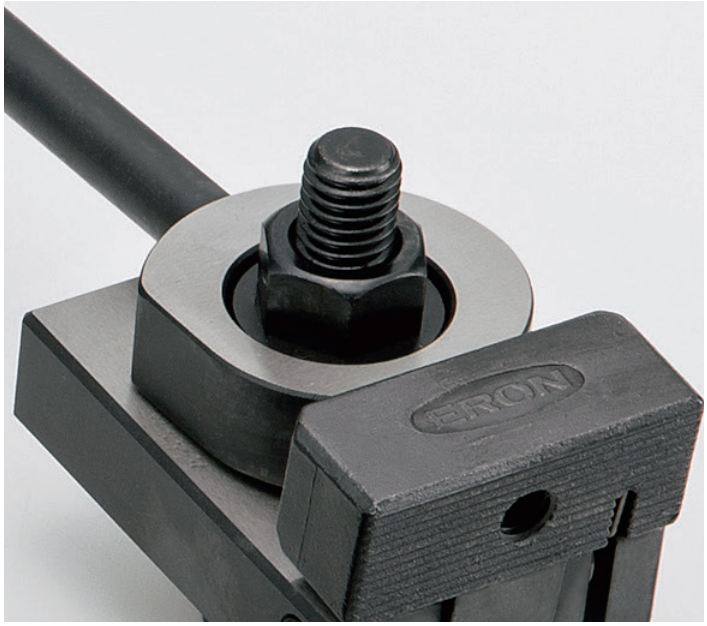

Multi Auto Clamps
Guide Bar Type [Series Type]
No.E-1102 P.56

Multi Auto Clamps
Guide Plate Type [Series Type]
No.E-1102 P.57

Multi Auto Clamps
Double-sided Type [Branch Type]
No.E-1102 P.58

Multi Auto Clamps
Single-sided Type [Branch Type]
No.E-1102 P.59

Low Wedge Clamps
No.E-918 P.60

Pull Down Free Jaw Vises
No.E-231 P.62

Vacuum Chucks
No.E-1101 P.64

Magnetic Chucks
No.E-939 P.68

MC Angle Plates with Magnetic Chuck
No.E-939M P.69

MC Tooling Blocks with Magnetic Chuck
No.E-939T P.69

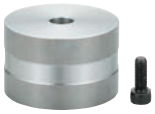

Magnetic Height Blocks
No.E-939 P.70

Magnetic Height Blocks with Lift Function
No.E-939 P.70

Mag-work Support
No.E-939 P.70

Controllers ST120F/ST200F
No.E-939 P.70

Magnetic Self-cut Plates
No.E-939 P.71

Side Stoppers
No.E-939 P.71

Clamping Accessories for Magnetic Chuck
No.E-939 P.71

Contents

Contents

Clamping Parts

Product Name

Stock No.	Page

Clamping Kits

No.E-412	P.80

Clamping Kits with Metal Racks

No.E-412SM	P.81

T-Slot Nuts & Studs Sets with Metal Racks

No.E-411SM	P.81

Step Clamps

No.E-413	P.82

Injection Clamps

No.E-428	P.83

Injection Clamps Type Q

No.E-428Q	P.84

Step Blocks

No.E-414	P.85

Flanged Nuts

No.E-403	P.86

Spherical Flanged Nuts

No.E-425	P.87

Coupling Nuts

No.E-404	P.88

Coupling Nuts (Type Long)

No.E-404	P.88

Flat Washers

No.E-418	P.89

Self-Aligning Washers

No.E-426	P.90

T-Slot Nuts

No.E-402	P.91

Stud Bolts

No.E-400	P.92

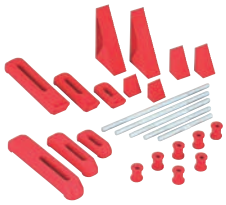

Pla Clamping Kits

No.E-472	P.95

Pla Step Blocks

No.E-467	P.96

Pla Step Clamps

No.E-468	P.96

Pla Plain Clamps

No.E-469	P.96

Pla Double Flanged Nuts

No.E-471	P.97

Aluminum Stud Bolts

No.E-470	P.97

Contents

Contents

Machine Vises

Product Name

Stock No.	Page

Lock-Tight CV
Precision Machine Vises
No.E-990 P.104

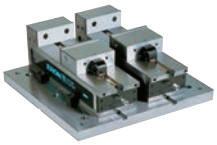

Lock-Tight CV
Precision Machine Vises
- Multiple Jaw Vises
No.E-990T P.108

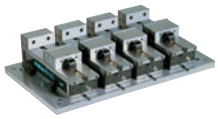

Lock-Tight CV
Precision Machine Vises
- Multiple Jaw Vises
No.E-990T P.109

4 Faces/Lock-Tight CV
Precision Machine Vises
No.E-990I P.109

Lock-Tight FA
Quick One Machine Vises
No.E-775Q P.110

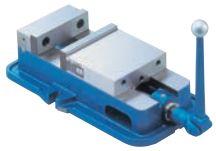

Lock-Tight
Precision Machine Vises
No.E-275M P.112

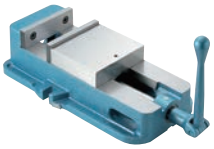

Lock-Tight
Precision Machine Vises Type L
No.E-275L P.114

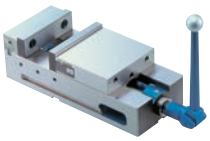

Lock-Tight MC
Precision Machine Vises
No.E-275M P.116

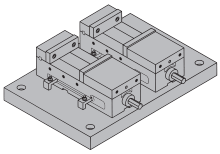

Lock-Tight MC
Precision Machine Vises
- Multiple Jaw Vises
No.E-275T P.118

Lock-Tight
Hydraulic Machine Vises Mk III
No.E-475 P.120

Lock-Tight 5 Axis
Machine Vises
No.E-940 P.122

Lock-Tight 5 Axis
Machine Vises
No.E-940 P.124

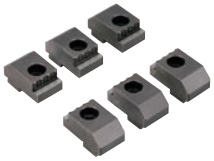

Lock-Tight 5 Axis
Machine Vise Accessories
No.E-940B P.126

Lock-Tight 5 Axis
Machine Vise Accessories
No.E-940B P.128

Lock-Tight
FA Machine Vises
No.E-775 P.130

Precision Parallel Blocks
4 Pairs Sets
No.E-158S P.131

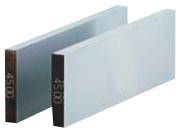

Precision Parallel Blocks
No.E-158U P.132

Machine Vise
Series Accessories
No.E-275B P.133

Machine Vise
Series Accessories
No.E-275B P.134

Machine Vise
Series Accessories
No.E-275B P.136

Machine Vise
Series Accessories
No.E-275B P.137

Contents

Contents

Drilling Vises/Vibration Isolation/Surface Plates and Measurement Instruments

Product Name | Stock No. | Page

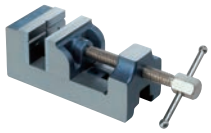

Drill Press Vises
No.E-117 P.142

Uni Lever Action Vises
No.E-350 P.144

Quick Action Drill Press Vises
No.E-250 P.146

Low-Floor Type Vibration Isolation Plates
No.E-272 P.152

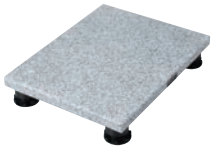

Vibration Isolation Bases
No.E-272 P.154

Vibration Isolation Mounts
No.E-923 P.155

Vibration Isolation Mounts (Lightweight Type)
No.E-923 P.157

Built-in Vibration Isolation Mounts (Lightweight Type)
No.E-942 P.158

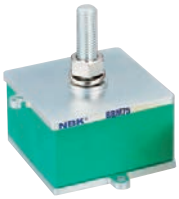

Built-in Vibration Isolation Mounts (Midweight Type)
No.E-942 P.160

Built-in Vibration Isolation Mounts (Heavyweight Type)
No.E-942 P.162

JIS Type Cast Iron Surface Plates
No.E-130 P.168

Stands for JIS Type Cast Iron Surface Plates
No.E-130S P.172

Granite Surface Plates
No.E-230 P.170

Stands for Granite Surface Plates
No.E-230S P.173

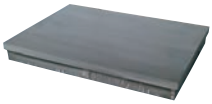

Cast Iron Surface Plates
No.E-127 P.174

Stand for Cast Iron Surface Plates
No.E-165 P.176

Box Vee Blocks
No.E-111 P.178

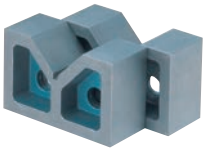

Vee Blocks Type B
No.E-110 P.179

MEMO

Base Elements
Clamp Units
Clamping Parts
Machine Vises
Drilling Vises
Vibration Isolation
Surface Plates and Measurement Instruments
Index

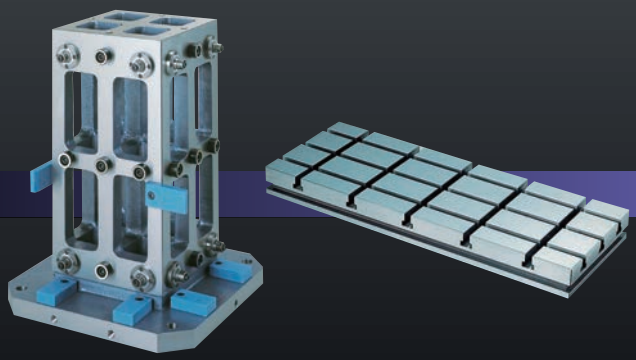

Base Elements

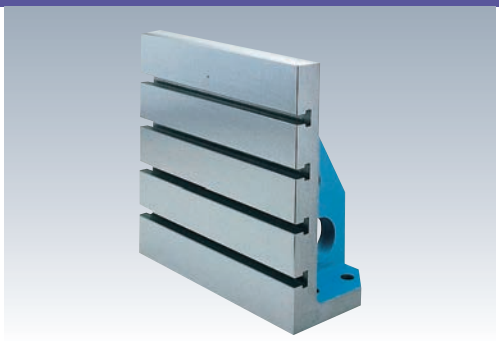

RoHS Compliant

ERON

No.E-128M

MC T-Slotted Angle Plates (T-Slot Type)

Material FC 250 Heat Treatment Annealing

Surface Treatment Painting (Cast Surface)

● Has mounting holes for the horizontal machining center.

Machined Finish

Ground Finish

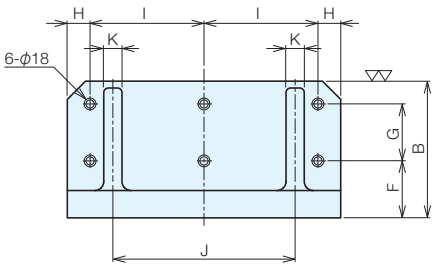

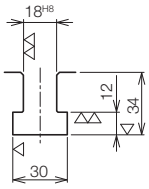

T-slot dimension

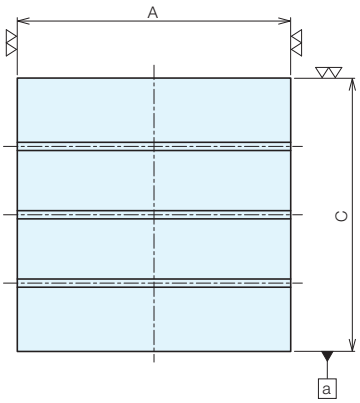

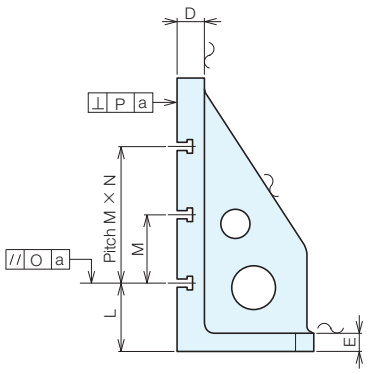

Specifications

Order No.	No.	A	B	C	D	E	F	Mounting Hole Diameter	Number of Mounting Holes
03806	**GTP-400**	360	200	400	60	30	80	ϕ 18	6
03807	**GTP-500**	500	250	500	60	40	100	ϕ 18	6
03808	**GTP-630**	600	300	600	60	40	125	ϕ 18	6
03809	**GTP-800**	800	400	800	75	50	160	ϕ 18	6

No.	G	H	I	J	K	L	M	N	O	P	Finish	Weight (kg)
GTP-400	80	20	160	240	30	50	100	3	0.05	0.03	Ground	50
GTP-500	100	50	200	300	40	100	100	3	0.05	0.03	Ground	156
GTP-630	125	50	250	400	40	150	150	2	0.05	0.03	Ground	219
GTP-800	160	80	320	500	50	100	150	4	0.05	0.1	Machined	526

* Custom-made products to suit your specifications are also available.

Base Elements
Clamp Units
Clamping Parts
Machine Vises
Drilling Vises
Vibration Isolation
Surface Plates and Measurement Instruments
Index

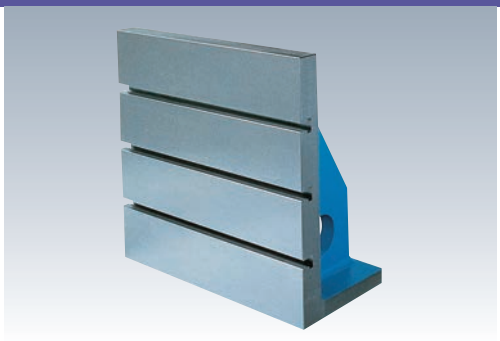

RoHS Compliant

ERON

No.E-128M

MC T-Slotted Angle Plates (T-Slot Type)

Material FC 250 Heat Treatment Annealing

Surface Treatment Painting (Cast Surface)

Machined Finish ▽▽ (⌒ , ▽)

Ground Finish ▽▽▽ (⌒ , ▽ , ▽▽)

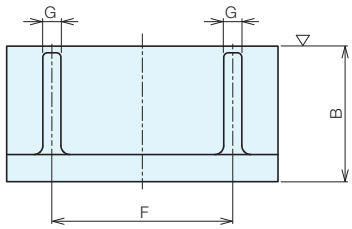

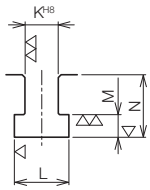

T-slot dimension

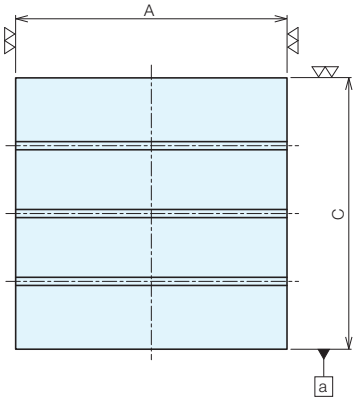

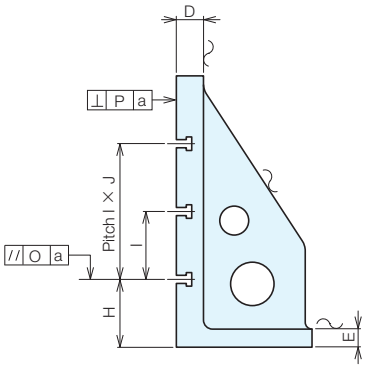

Specifications

Order No.	No.	A	B	C	D	E	F	G	H	I
00219	**GTP1**	300	150	300	60	30	200	30	100	100
00233	**GTP2**	360	200	400	60	30	240	30	50	100
00234	**GTP3**	600	300	600	60	40	400	40	150	150
00235	**GTP4**	900	450	900	75	50	600	50	150	150
00236	**GTP5**	1200	600	1200	85	50	800	50	150	150
00237	**GTP6**	450	450	900	75	50	300	40	150	150
03360	**GTP7**	400	150	300	60	30	240	30	100	100
03361	**GTP8**	500	250	500	60	40	300	40	100	100

No.	J	K	L	M	N	O	P	Finish	Weight (kg)
GTP1	1	18	30	12	34	0.05	0.03	Ground	53
GTP2	3	18	30	12	34	0.05	0.03	Ground	88
GTP3	2	18	30	12	34	0.05	0.03	Ground	230
GTP4	4	22	37	16	42	0.05	0.1	Machined	680
GTP5	6	28	46	20	53	0.05	0.1	Machined	1300
GTP6	4	22	37	16	42	0.05	0.1	Machined	309
GTP7	1	18	30	12	34	0.05	0.03	Ground	66
GTP8	4	18	30	12	34	0.05	0.03	Ground	165

* Custom-made products to suit your specifications are also available.

Base Elements
Clamp Units
Clamping Parts
Machine Vises
Drilling Vises
Vibration Isolation
Surface Plates and Measurement Instruments
Index

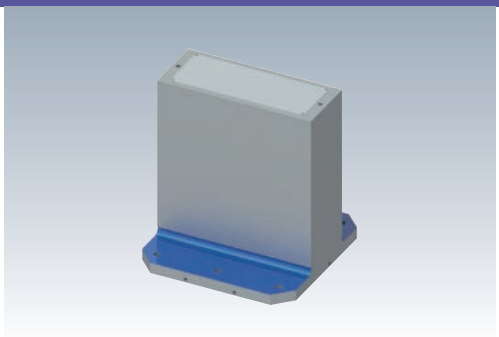

RoHS Compliant

No.E-159

MC Tooling Blocks (2 Faces/Standard Type)

Material FC250 Heat Treatment Annealing

Surface Treatment Painting (Cast Surface)

Accessories Top Plates, Set Screws for Top Plate, Eye Bolts

- 0.4-0.5mm of self-cut allowance is included on the used surface.
- The same accuracy as the machine you are using is possible from the self-cut.
- Your preferred machining such as T-slots and tapping can be done using the machine you are using.
- Bottom and 2 adjacent edge locator surfaces can be ground finish, and top surface of base plate can be machined finish as options.

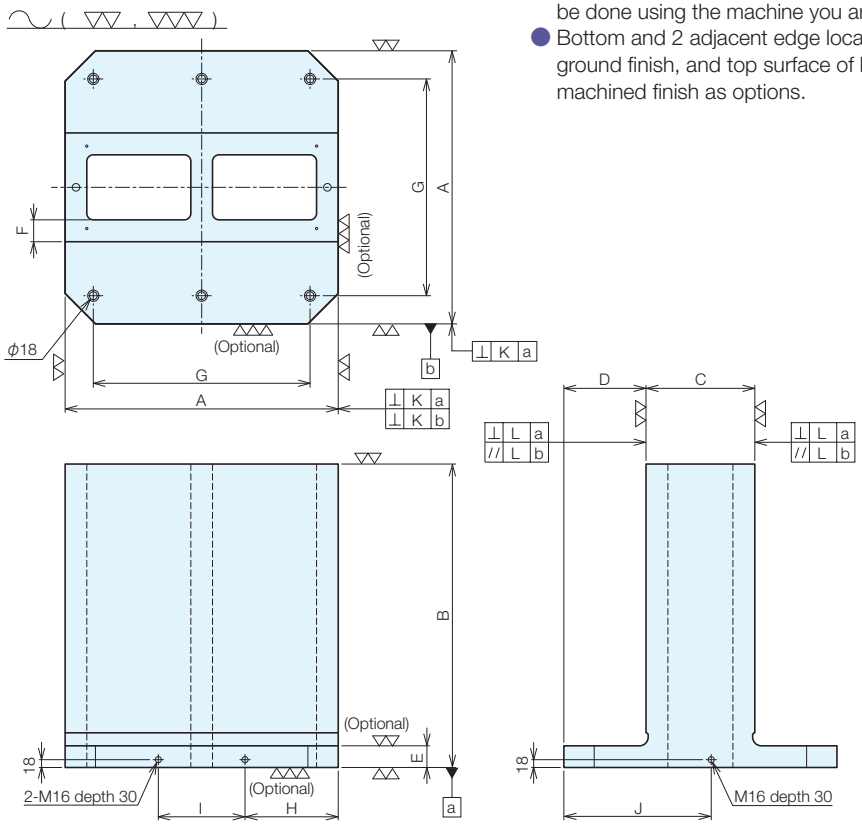

Size Chart

No.	A	E	F	G	Mounting Hole Diameter	Number of Mounting Holes	H	I	J	K	L
TBS03S-*****	300	25	40	-	-	0	-	-	-	0.02/300	0.02/300
TBS04S-*****	400	40	50	320	ϕ 18	4	145	110	225	0.02/300	0.02/300
TBS05S-*****	500	50	50	400	ϕ 18	4	175	150	275	0.02/300	0.02/300
TBS06S-*****	630	50	50	500	ϕ 18	6	215	200	340	0.02/300	0.02/300
TBS08S-*****	800	50	50	640	ϕ 18	6	265	270	425	0.02/300	0.02/300
TBS10S-*****	1000	55	65	800	ϕ 22	6	335	330	525	0.02/300	0.02/300

Machined Finish

No.	K	L	
☐ 300	0.01/500	0.01/300	
☐ 400	0.01/500	0.01/300	
☐ 500	0.01/500	0.01/300	
☐ 630 (up to height 800)	0.01/500	0.01/300	
☐ 630 (height 850 or more)	0.01/500	0.01/300	
☐ 800 (up to height 800)	0.01/500	0.01/300	
☐ 800 (height 850 or more)	0.01/500	0.01/300	
☐ 1000	0.01/500	0.01/300	

Base Elements
Clamp Units
Clamping Parts
Machine Vises
Drilling Vises
Vibration Isolation
Surface Plates and Measurement Instruments
Index

Specifications

Order No.	No.	B	C	D	Weight (kg)	
115028	TBS03S-15028	280	150.8	74.6	69	
115030	TBS03S-20030	300	200.8	49.6	80	
115031	TBS03S-17032	325	175.8	62.1	83	
115032	TBS03S-15035	350	150.8	74.6	85	
115033	TBS04S-15035	350	150.8	124.6	148	
115034	TBS04S-20045	450	200.8	99.6	201	
115035	TBS04S-15050	500	150.8	124.6	200	
115036	TBS04S-17050	500	175.8	112.1	211	
115037	TBS04S-20050	500	200.8	99.6	221	
115038	TBS04S-22050	500	225.8	87.1	231	
115039	TBS04S-25050	500	250.8	74.6	241	
115040	TBS04S-17055	550	175.8	112.1	230	
115041	TBS04S-20055	550	200.8	99.6	241	
115042	TBS04S-22055	550	225.8	87.1	252	
115043	TBS04S-25055	550	250.8	74.6	263	
115044	TBS04S-15060	600	150.8	124.6	235	
115045	TBS04S-17060	600	175.8	112.1	249	
115046	TBS04S-20060	600	200.8	99.6	261	
115047	TBS04S-22060	600	225.8	87.1	273	
115048	TBS04S-25060	600	250.8	74.6	286	
115049	TBS04S-17065	650	175.8	112.1	267	
115050	TBS04S-20065	650	200.8	99.6	281	
115051	TBS04S-22065	650	225.8	87.1	295	
115052	TBS04S-25065	650	250.8	74.6	308	
115053	TBS04S-17070	700	175.8	112.1	286	
115054	TBS04S-20070	700	200.8	99.6	301	
115055	TBS05S-20050	500	200.8	149.6	287	
115056	TBS05S-25055	550	250.8	124.6	329	
115057	TBS05S-20060	600	200.8	149.6	334	
115058	TBS05S-22060	600	220.8	139.6	343	
115059	TBS05S-25060	600	250.8	124.6	356	
115060	TBS05S-20065	650	200.8	149.6	358	
115061	TBS05S-22065	650	220.8	139.6	368	
115062	TBS05S-25065	650	250.8	124.6	382	
115063	TBS05S-20070	700	200.8	149.6	382	
115064	TBS05S-22070	700	220.8	139.6	392	
115065	TBS05S-25070	700	250.8	124.6	409	
115066	TBS06S-20060	600	201	214.5	438	
115067	TBS06S-20070	700	201	214.5	496	
115068	TBS06S-25070	700	251	189.5	524	
115069	TBS06S-30070	700	301	164.5	551	
115070	TBS06S-20075	750	201	214.5	525	
115071	TBS06S-25075	750	251	189.5	556	
115072	TBS06S-30075	750	301	164.5	586	
115073	TBS06S-20080	800	201	214.5	554	
115074	TBS06S-25080	800	251	189.5	588	

Order No.	No.	B	C	D	Weight (kg)	
115075	TBS06S-30080	800	301	164.5	620	
115076	TBS06S-20085	850	201	214.5	582	
115077	TBS06S-25085	850	251	189.5	619	
115078	TBS06S-30085	850	301	164.5	654	
115079	TBS06S-20090	900	201	214.5	611	
115080	TBS06S-25090	900	251	189.5	650	
115081	TBS06S-30090	900	301	164.5	688	
115082	TBS06S-20095	950	201	214.5	641	
115083	TBS06S-25095	950	251	189.5	682	
115084	TBS06S-30095	950	301	164.5	722	
115085	TBS06S-20100	1000	201	214.5	670	
115086	TBS06S-25100	1000	251	189.5	714	
115087	TBS06S-30100	1000	301	164.5	757	
115088	TBS08S-25080	800	251	274.5	755	
115089	TBS08S-30080	800	301	249.5	781	
115090	TBS08S-35080	800	351	224.5	807	
115091	TBS08S-40080	800	401	199.5	833	
115092	TBS08S-25085	850	251	274.5	792	
115093	TBS08S-30085	850	301	249.5	821	
115094	TBS08S-35085	850	351	224.5	850	
115095	TBS08S-40085	850	401	199.5	879	
115096	TBS08S-25090	900	251	274.5	830	
115097	TBS08S-30090	900	301	249.5	861	
115098	TBS08S-35090	900	351	224.5	893	
115099	TBS08S-40090	900	401	199.5	924	
115100	TBS08S-50090	900	501	149.5	990	
115101	TBS08S-25095	950	251	274.5	868	
115102	TBS08S-30095	950	301	249.5	902	
115103	TBS08S-35095	950	351	224.5	935	
115104	TBS08S-40095	950	401	199.5	973	
115105	TBS08S-25100	1000	251	274.5	905	
115106	TBS08S-30100	1000	301	249.5	942	
115107	TBS08S-35100	1000	351	224.5	982	
115108	TBS08S-40100	1000	401	199.5	1018	
115109	TBS08S-50100	1000	501	149.5	1091	
115110	TBS08S-25110	1100	251	274.5	984	
115111	TBS08S-30110	1100	301	249.5	1026	
115112	TBS08S-35110	1100	351	224.5	1067	
115113	TBS08S-40110	1100	401	199.5	1109	
115114	TBS08S-25120	1200	251	274.5	1060	
115115	TBS08S-30120	1200	301	249.5	1106	
115116	TBS08S-35120	1200	351	224.5	1153	
115117	TBS08S-40120	1200	401	199.5	1200	
115118	TBS08S-50120	1200	501	149.5	1293	
115119	TBS10S-40070	700	401	299.5	1219	
115120	TBS10S-30080	800	301	349.5	1267	

* Custom-made products to suit your specifications are also available.

Please specify your desired dimensions and weight.

Palette Size	B	C	Weight (kg)

Base Elements
Clamp Units
Clamping Parts
Machine Vises
Drilling Vises
Vibration Isolation
Surface Plates and Measurement Instruments
Index

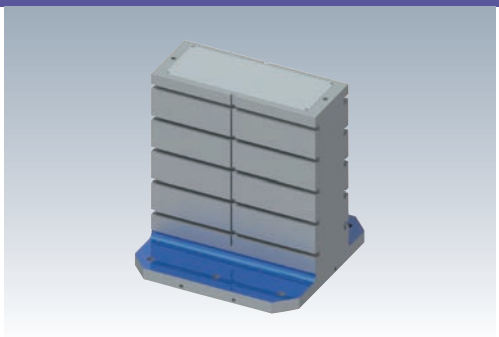

RoHS Compliant

No.E-159

MC Tooling Blocks (2 Faces/Standard T-Slot Type)

Material FC250 **Heat Treatment** Annealing

Surface Treatment Painting (Cast Surface)

Accessories Top Plates, Set Screws for Top Plate, Eye Bolts

- Type with T-slots and U-slots in addition to the standard specifications.
- 0.4-0.5mm of self-cut allowance is included on the used surface.
- The same accuracy as the machine you are using is possible from the self-cut.
- Bottom and 2 adjacent edge locator surfaces can be ground finish, and top surface of base plate can be machined finish as options.

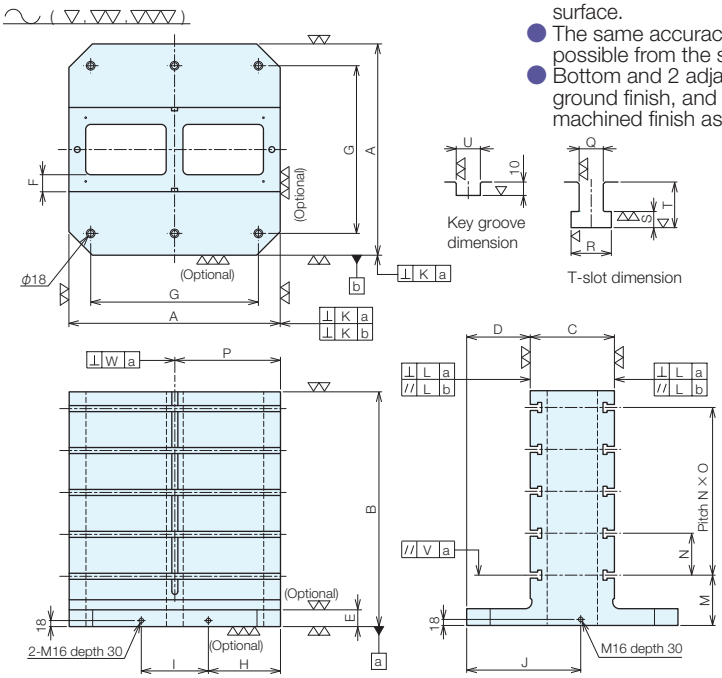

Size Chart

No.	A	E	F	G	Mounting Hole Diameter	Number of Mounting Holes	H	I	J	K	L	P	Q H8	R	S	T	U H8
TGV04S-*****	400	50	50	320	φ 18	4	145	110	225	0.02/300	0.02/300	200	18	30	12	34	18
TGV05S-*****	500	50	50	400	φ 18	4	175	150	275	0.02/300	0.02/300	250	18	30	12	34	18
TGV06S-*****	630	50	50	500	φ 18	6	215	200	340	0.02/300	0.02/300	315	18	30	12	34	18
TGV08S-*****	800	50	50	640	φ 18	6	265	270	425	0.02/300	0.02/300	400	18	30	12	34	18
TGV010S-*****	1000	60	65	800	φ 22	6	335	330	525	0.02/300	0.02/300	500	22	37	16	42	22

Optional Ground Finish and Machined Finish

No.	K	L	
□ 400	0.01/500	0.01/300	
□ 500	0.01/500	0.01/300	
□ 630	0.01/500	0.01/300	
□ 800	0.01/500	0.01/300	
□ 1000	0.01/500	0.01/300	

Please specify your desired dimensions and weight.

Palette Size	B	C	M	N	O	Q H8	U H8	Weight (kg)

Specifications

Order No.	No.	B	C	D	M	N	O	V	W	Weight (kg)	
115121	TGV04S-15035	350	150.8	124.6	100	100	2	0.7	0.06	134	
115122	TGV04S-20045	450	200.8	99.6	100	100	3	0.7	0.06	182	
115123	TGV04S-25050	500	250.8	74.6	150	100	3	0.7	0.07	222	
115124	TGV04S-15060	600	150.8	124.6	150	100	4	0.7	0.08	212	
115125	TGV05S-20050	500	200.8	99.6	150	100	3	0.7	0.07	263	
115126	TGV05S-25055	550	250.8	124.6	150	100	3	0.7	0.08	306	
115127	TGV05S-22060	600	220.8	139.6	150	100	4	0.7	0.08	314	
115128	TGV05S-25070	700	250.8	124.6	150	100	5	0.7	0.09	374	
115129	TGV06S-20060	600	201	149.5	150	125	3	0.7	0.08	409	
115130	TGV06S-25070	700	251	124.5	150	125	4	0.7	0.09	487	
115131	TGV06S-30070	700	301	164.5	150	125	4	0.7	0.09	514	
115132	TGV06S-25080	800	251	189.5	125	125	5	0.7	0.12	543	
115133	TGV08S-30080	800	301	164.5	150	150	4	0.1	0.12	735	
115134	TGV08S-40080	800	401	114.5	150	150	4	0.1	0.12	787	
115135	TGV08S-50090	900	501	149.5	150	150	4	0.1	0.12	944	
115136	TGV10S-40070	700	401	199.5	160	160	3	0.12	0.12	1148	
115137	TGV10S-30080	800	301	249.5	160	135	4	0.12	0.12	1175	

* Custom-made products to suit your specifications are also available.

Base Elements
Clamp Units
Clamping Parts
Machine Vises
Drilling Vises
Vibration Isolation
Surface Plates and Measurement Instruments
Index

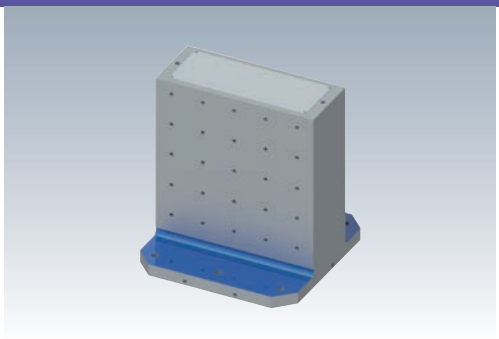

RoHS Compliant

No.E-159

MC Tooling Blocks (2 Faces/Standard Tapped Holes Type)

Material FC250 Heat Treatment Annealing

Surface Treatment Painting (Cast Surface)

Accessories Top Plates, Set Screws for Top Plate, Eye Bolts

- Type with tapped holes in addition to the standard specifications.
- 0.4-0.5mm of self-cut allowance is included on the used surface.
- The same accuracy as the machine you are using is possible from the self-cut.
- Bottom and 2 adjacent edge locator surfaces can be ground finish, and top surface of base plate can be machined finish as options.

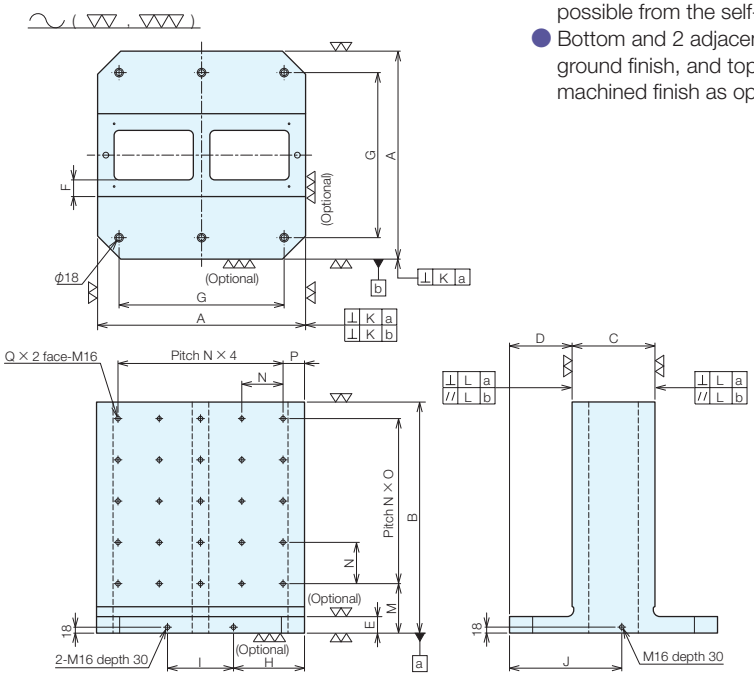

Size Chart

No.	A	E	F	G	Number of Mounting Holes	H	I	J	K	L
TPH04S-*****	400	50	50	320	4	145	110	225	0.02/300	0.02/300
TPH05S-*****	500	50	50	400	4	175	150	275	0.02/300	0.02/300
TPH06S-*****	630	50	50	500	6	215	200	340	0.02/300	0.02/300
TPH08S-*****	800	50	50	640	6	265	270	425	0.02/300	0.02/300

Optional Ground Finish and Machined Finish

No.	K	L
☐ 400	0.01/500	0.01/300
☐ 500	0.01/500	0.01/300
☐ 630	0.01/500	0.01/300
☐ 800	0.01/500	0.01/300

Please specify your desired dimensions and weight.

Palette Size	B	C	M	N	O	P	Used Surface Tapping Hole Diameter	Weight (kg)

Specifications

Order No.	No.	B	C	D	M	N	O	P	Q	Weight (kg)
115138	TPH04S-15035	350	150.8	124.6	100	75	3	125	20	146
115139	TPH04S-20045	450	200.8	99.6	100	75	4	125	25	198
115140	TPH04S-25050	500	250.8	74.6	100	75	5	125	30	237
115141	TPH04S-15060	600	150.8	124.6	140	75	5	125	30	232
115142	TPH05S-20050	500	200.8	99.6	125	100	3	100	20	284
115143	TPH05S-25055	550	250.8	124.6	150	100	3	150	20	327
115144	TPH05S-22060	600	220.8	139.6	150	100	4	150	25	340
115145	TPH05S-25070	700	250.8	124.6	100	100	5	150	30	405
115146	TPH06S-20060	600	201	149.5	150	125	3	125	20	436
115147	TPH06S-25070	700	251	124.5	150	125	4	125	25	520
115148	TPH06S-30070	700	301	164.5	150	125	4	190	25	547
115149	TPH06S-25080	800	251	189.5	125	125	5	190	30	582
115150	TPH08S-30080	800	301	164.5	150	150	4	165	25	778
115151	TPH08S-40080	800	401	114.5	150	150	4	165	25	832
115152	TPH08S-50090	900	501	64.5	150	150	4	165	25	987

* Custom-made products to suit your specifications are also available.

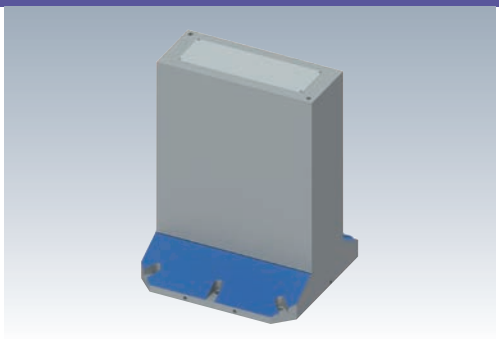

RoHS Compliant

No.E-159L

MC Tooling Blocks (2 Faces/Light Weight Type)

Material FCD600 **Heat Treatment** Annealing

Surface Treatment Painting (Cast Surface)

Accessories Top Plates, Set Screws for Top Plate, Eye Bolts

- Angle plate that delivers light weight while ensuring rigidity by using slanted surfaces and a rib structure.
- Shape that makes it hard for chips to remain.
- 0.4-0.5mm of self-cut allowance is included on the used surface.
- The same accuracy as the machine you are using is possible from the self-cut.
- Your preferred machining such as tapping and grooves can be done using the machine you are using.
- Bottom and 2 adjacent edge locator surfaces can be ground finish as options.

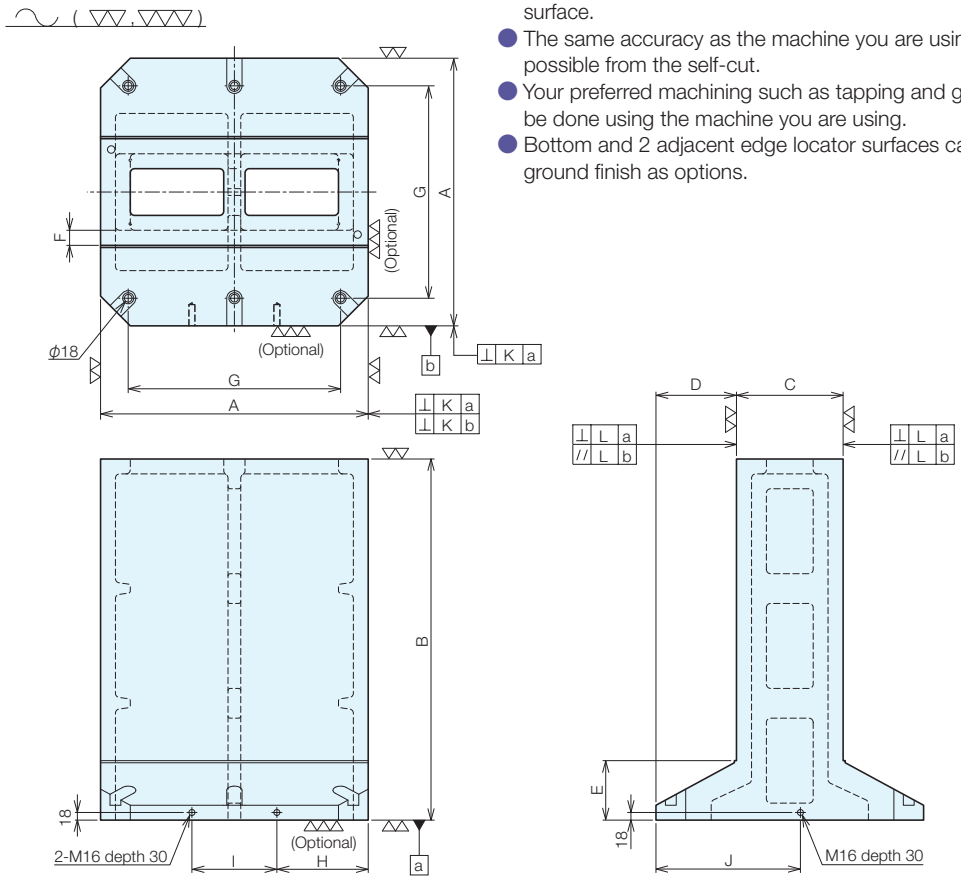

Size Chart

No.	A	F	G	Number of Mounting Holes	H	I	J	K	L
TBL03S-*****	300	20	-	0	-	-	-	0.02/300	0.02/300
TBL04S-*****	400	25	320	4	145	110	225	0.02/300	0.02/300
TBL05S-*****	500	25	400	4	175	150	275	0.02/300	0.02/300
TBL06S-*****	630	35	500	6	215	200	340	0.02/300	0.02/300
TBL08S-*****	800	35	640	6	265	270	425	0.02/300	0.02/300

Optional - Ground Finish

No.	K	L	
☐ **300**	0.01/500	0.01/300	
☐ **400**	0.01/500	0.01/300	
☐ **500 (Up to height 800)**	0.01/500	0.01/300	
☐ **500 (Height 850 and over)**	0.01/500	0.01/300	
☐ **630**	0.01/500	0.01/300	
☐ **800**	0.01/500	0.01/300	

Base Elements
Clamp Units
Clamping Parts
Machine Vises
Drilling Vises
Vibration Isolation
Surface Plates and Measurement Instruments
Index

Specifications

Order No.	No.	B	C	D	E	Weight (kg)
115153	TBL03S-15028	280	150.8	74.6	65	45
115154	TBL04S-22055	550	225.8	87.1	85	152
115155	TBL04S-25055	550	250.8	74.6	80	155
115156	TBL04S-17060	600	175.8	112.1	90	151
115157	TBL04S-20060	600	200.8	99.6	85	157
115158	TBL04S-22060	600	225.8	87.1	85	163
115159	TBL04S-25060	600	250.8	74.6	80	167
115160	TBL04S-17065	650	175.8	112.1	90	163
115161	TBL04S-20065	650	200.8	99.6	85	168
115162	TBL04S-22065	650	225.8	87.1	85	174
115163	TBL04S-25065	650	250.8	74.6	80	178
115164	TBL04S-17070	700	175.8	112.1	90	173
115165	TBL04S-20070	700	200.8	99.6	85	178
115166	TBL04S-22070	700	225.8	87.1	85	184
115167	TBL04S-25070	700	250.8	74.6	80	189
115168	TBL05S-22060	600	220.8	139.6	110	213
115169	TBL05S-25060	600	250.8	124.6	100	214
115170	TBL05S-20065	650	200.8	149.6	110	220
115171	TBL05S-22065	650	220.8	139.6	110	226
115172	TBL05S-25065	650	250.8	124.6	100	228
115173	TBL05S-20070	700	200.8	149.6	110	233
115174	TBL05S-22070	700	220.8	139.6	110	238
115175	TBL05S-25070	700	250.8	124.6	100	241
115176	TBL05S-20075	750	200.8	149.6	110	246
115177	TBL05S-22075	750	220.8	139.6	110	251
115178	TBL05S-25075	750	250.8	124.6	100	254
115179	TBL05S-20080	800	200.8	149.6	110	258
115180	TBL05S-22080	800	220.8	139.6	110	263
115181	TBL05S-25080	800	250.8	124.6	100	267
115182	TBL05S-20085	850	200.8	149.6	110	270
115183	TBL05S-22085	850	220.8	139.6	110	276
115184	TBL05S-25085	850	250.8	124.6	100	280
115185	TBL05S-20090	900	200.8	149.6	110	282
115186	TBL05S-22090	900	220.8	139.6	110	289
115187	TBL05S-25090	900	250.8	124.6	100	293
115188	TBL06S-30080	800	301	164.5	130	473
115189	TBL06S-25085	850	251	189.5	140	480
115190	TBL06S-30085	850	301	164.5	130	496
115191	TBL06S-20090	900	201	214.5	140	475
115192	TBL06S-25090	900	251	189.5	140	502
115193	TBL06S-30090	900	301	164.5	130	518
115194	TBL06S-20095	950	201	214.5	140	495
115195	TBL06S-25095	950	251	189.5	140	523
115196	TBL06S-30095	950	301	164.5	130	541
115197	TBL06S-20100	1000	201	214.5	140	515
115198	TBL06S-25100	1000	251	189.5	140	545
115199	TBL06S-30100	1000	301	164.5	130	564
115200	TBL08S-40100	1000	401	199.5	150	856
115201	TBL08S-30110	1100	301	249.5	170	880
115202	TBL08S-35110	1100	351	224.5	160	906
115203	TBL08S-40110	1100	401	199.5	150	932
115204	TBL08S-50110	1100	501	149.5	120	978
115205	TBL08S-25120	1200	251	274.5	170	896
115206	TBL08S-30120	1200	301	249.5	170	941
115207	TBL08S-35120	1200	351	224.5	160	972
115208	TBL08S-40120	1200	401	199.5	150	1000
115209	TBL08S-50120	1200	501	149.5	120	1050

* Custom-made products to suit your specifications are also available.
Please specify your desired dimensions and weight.

Palette Size	B	C	Weight (kg)

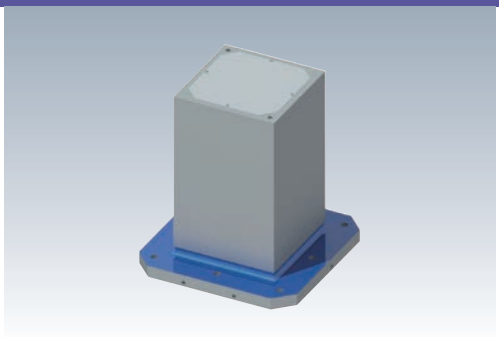

RoHS Compliant

No.E-159

MC Tooling Blocks (4 Faces/Standard Type)

Material FC250 **Heat Treatment** Annealing

Surface Treatment Painting (Cast Surface)

Accessories Top Plates, Set Screws for Top Plate, Eye Bolts

- 0.4-0.5mm of self-cut allowance is included on the used surface.
- The same accuracy as the machine you are using is possible from the self-cut.
- Your preferred machining such as T-slots and tapping can be done using the machine you are using.
- Bottom and 2 adjacent edge locator surfaces can be ground finish, and top surface of base plate can be machined finish as options.

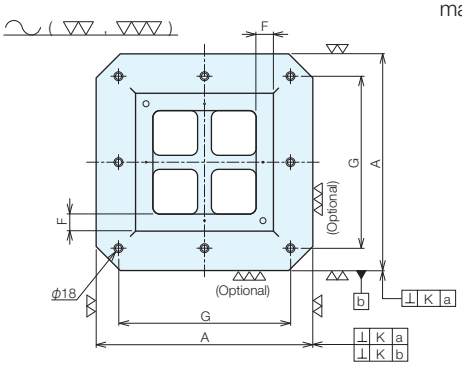

TBS10-***** only

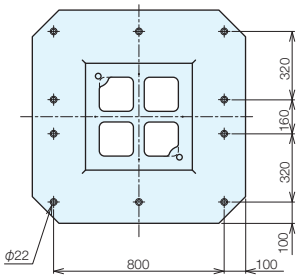

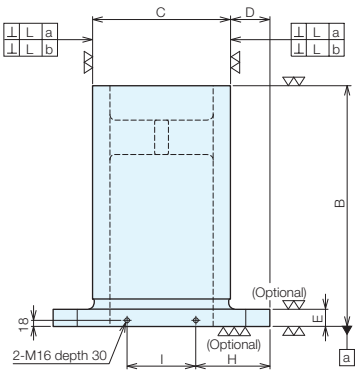

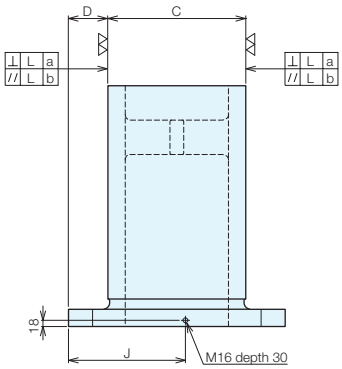

Size Chart

No.	A	E	F	G	Mounting Hole Diameter	Number of Mounting Holes	H	I	J	K	L
TBS03-*****	300	25	40	-	-	0	-	-	-	0.02/300	0.02/300
TBS04-*****	400	50	50	320	ϕ 18	4	145	110	225	0.02/300	0.02/300
TBS05-*****	500	50	50	400	ϕ 18	4	175	150	275	0.02/300	0.02/300
TBS06-*****	630	50	50	500	ϕ 18	8	215	200	340	0.02/300	0.02/300
TBS08-*****	800	50	50	640	ϕ 18	8	265	270	425	0.02/300	0.02/300
TBS10-*****	1000	60	65	In figure	ϕ 22	10	335	330	525	0.02/300	0.02/300

Optional Ground Finish and Machined Finish

No.	K	L	
☐ **300**	0.01/500	0.01/300	
☐ **400**	0.01/500	0.01/300	
☐ **500** (up to height 800)	0.01/500	0.01/300	
☐ **500** (height 850 and over)	0.01/500	0.01/300	
☐ **630** (up to height 800)	0.01/500	0.01/300	
☐ **630** (height 850 or more)	0.01/500	0.01/300	
☐ **800** (up to height 800)	0.01/500	0.01/300	
☐ **800** (height 850 or more)	0.01/500	0.01/300	
☐ **1000**	0.01/500	0.01/300	

Base Elements
Clamp Units
Clamping Parts
Machine Vises
Drilling Vises
Vibration Isolation
Surface Plates and Measurement Instruments
Index

Specifications

Order No.	No.	B	C	D	Weight (kg)
115210	TBS03-15035	350	150.8	74.6	57
115211	TBS03-20035	350	200.8	49.6	75
115212	TBS03-20040	400	200.8	49.6	84
115213	TBS04-20045	450	200.8	99.6	141
115214	TBS04-22045	450	225.8	87.1	154
115215	TBS04-25045	450	250.8	74.6	166
115216	TBS04-20050	500	200.8	99.6	153
115217	TBS04-22050	500	225.8	87.1	167
115218	TBS04-25050	500	250.8	74.6	181
115219	TBS04-20055	550	200.8	99.6	164
115220	TBS04-22055	550	225.8	87.1	180
115221	TBS04-25055	550	250.8	74.6	196
115222	TBS04-20060	600	200.8	99.6	175
115223	TBS04-22060	600	225.8	87.1	193
115224	TBS04-25060	600	250.8	74.6	211
115225	TBS04-20065	650	200.8	99.6	186
115226	TBS04-22065	650	225.8	87.1	206
115227	TBS04-25065	650	250.8	74.6	226
115228	TBS04-20070	700	200.8	99.6	197
115229	TBS04-22070	700	225.8	87.1	219
115230	TBS04-25070	700	250.8	74.6	241
115231	TBS05-25055	550	250.8	124.6	231
115232	TBS05-30055	550	300.8	99.6	262
115233	TBS05-35055	550	350.8	74.6	292
115234	TBS05-25060	600	250.8	124.6	246
115235	TBS05-30060	600	300.8	99.6	281
115236	TBS05-35060	600	350.8	74.6	314
115237	TBS05-25065	650	250.8	124.6	261
115238	TBS05-30065	650	300.8	99.6	300
115239	TBS05-35065	650	350.8	74.6	337
115240	TBS05-25070	700	250.8	124.6	276
115241	TBS05-30070	700	300.8	99.6	318
115242	TBS05-35070	700	350.8	74.6	359
115243	TBS05-25075	750	250.8	124.6	291
115244	TBS05-30075	750	300.8	99.6	337
115245	TBS05-35075	750	350.8	74.6	381
115246	TBS05-25080	800	250.8	124.6	305
115247	TBS05-30080	800	300.8	99.6	355
115248	TBS05-25085	850	250.8	124.6	320
115249	TBS05-30085	850	300.8	99.6	374
115250	TBS05-25090	900	250.8	124.6	335
115251	TBS06-30060	600	301	164.5	340
115252	TBS06-45060	600	451	89.5	440
115253	TBS06-30070	700	301	164.5	377
115254	TBS06-35070	700	351	139.5	420
115255	TBS06-40070	700	401	114.5	460
115256	TBS06-45070	700	451	89.5	499
115257	TBS06-30075	750	301	164.5	396
115258	TBS06-35075	750	351	139.5	442
115259	TBS06-40075	750	401	114.5	486
115260	TBS06-45075	750	451	89.5	529
115261	TBS06-30080	800	301	164.5	414
115262	TBS06-35080	800	351	139.5	464
115263	TBS06-40080	800	401	114.5	512
115264	TBS06-45080	800	451	89.5	558
115265	TBS06-30085	850	301	164.5	433
115266	TBS06-35085	850	351	139.5	486
115267	TBS06-40085	850	401	114.5	538
115268	TBS06-45085	850	451	89.5	588
115269	TBS06-30090	900	301	164.5	451
115270	TBS06-35090	900	351	139.5	509
115271	TBS06-40090	900	401	114.5	564
115272	TBS06-45090	900	451	89.5	617
115273	TBS06-35095	950	351	139.5	531
115274	TBS06-40095	950	401	114.5	590
115275	TBS06-45095	950	451	89.5	647
115276	TBS06-35100	1000	351	139.5	553
115277	TBS06-40100	1000	401	114.5	616
115278	TBS06-45100	1000	451	89.5	676
115279	TBS08-40070	700	401	199.5	646
115280	TBS08-40080	800	401	199.5	716
115281	TBS08-45080	800	451	174.5	782
115282	TBS08-50080	800	501	149.5	847
115283	TBS08-55080	800	551	124.5	910
115284	TBS08-40085	850	401	199.5	750
115285	TBS08-45085	850	451	174.5	822
115286	TBS08-50085	850	501	149.5	892
115287	TBS08-55085	850	551	124.5	962
115288	TBS08-40090	900	401	199.5	785
115289	TBS08-45090	900	451	174.5	862
115290	TBS08-50090	900	501	149.5	937
115291	TBS08-55090	900	551	124.5	1012
115292	TBS08-40095	950	401	199.5	820
115293	TBS08-45095	950	451	174.5	902
115294	TBS08-50095	950	501	149.5	984
115295	TBS08-55095	950	551	124.5	1062
115296	TBS08-40100	1000	401	199.5	855
115297	TBS08-45100	1000	451	174.5	942
115298	TBS08-50100	1000	501	149.5	1029
115299	TBS08-55100	1000	551	124.5	1112
115300	TBS08-40105	1050	401	199.5	890
115301	TBS08-45105	1050	451	174.5	983
115302	TBS08-50105	1050	501	149.5	1074
115303	TBS08-55105	1050	551	124.5	1163
115304	TBS08-40110	1100	401	199.5	924
115305	TBS08-45110	1100	451	174.5	1023
115306	TBS08-50110	1100	501	149.5	1119
115307	TBS08-55110	1100	551	124.5	1213
115308	TBS08-40120	1200	401	199.5	995
115309	TBS08-45120	1200	451	174.5	1103
115310	TBS08-50120	1200	501	149.5	1209
115311	TBS08-55120	1200	551	124.5	1314
115312	TBS10-50850	850	501	249.5	1214
115313	TBS10-60105	1050	601	199.5	1667

* Custom-made products to suit your specifications are also available.

Please specify your desired dimensions and weight.

Palette Size	B	C	Weight (kg)

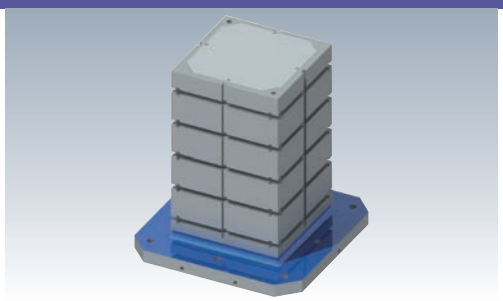

RoHS Compliant

No.E-159

MC Tooling Blocks (4 Faces/Standard T-Slot Type)

Material FC250 **Heat Treatment** Annealing

Surface Treatment Painting (Cast Surface)

Accessories Top Plates, Set Screws for Top Plate, Eye Bolts

- Type with T-slots and U-slots in addition to the standard specifications.
- 0.4-0.5mm of self-cut allowance is included on the used surface.
- The same accuracy as the machine you are using is possible from the self-cut.
- Bottom and 2 adjacent edge locator surfaces can be ground finish, and top surface of base plate can be machined finish as options.

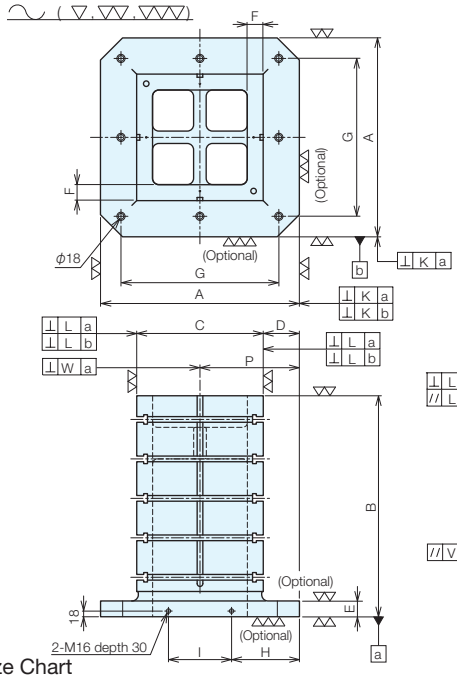

Key groove dimension

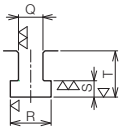

T-slot dimension

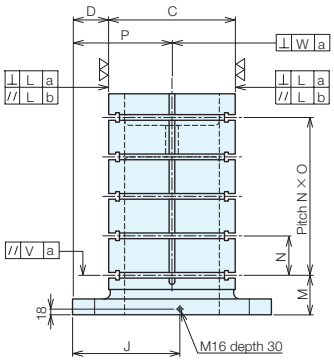

TGV10-***** only

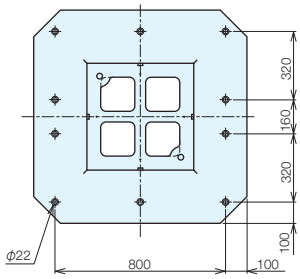

Size Chart

No.	A	E	F	G	Mounting Hole Diameter	Number of Mounting Holes	H	I	J	K	L	P	Q H8	R	S	T	U H8
TGV04-*****	400	50	50	320	ϕ 18	4	145	110	225	0.02/300	0.02/300	200	18	30	12	34	18
TGV05-*****	500	50	50	400	ϕ 18	4	175	150	275	0.02/300	0.02/300	250	18	30	12	34	18
TGV06-*****	630	50	50	500	ϕ 18	8	215	200	340	0.02/300	0.02/300	315	18	30	12	34	18
TGV08-*****	800	50	50	640	ϕ 18	8	265	270	425	0.02/300	0.02/300	400	18	30	12	34	18
TGV10-*****	1000	60	65	In figure	ϕ 22	10	335	330	525	0.02/300	0.02/300	500	22	37	16	42	22

Optional Ground Finish and Machined Finish

No.	K	L
☐ 400	0.01/500	0.01/300
☐ 500	0.01/500	0.01/300
☐ 630	0.01/500	0.01/300
☐ 800	0.01/500	0.01/300
☐ 1000	0.01/500	0.01/300

Please specify your desired dimensions and weight.

Palette Size	B	C	M

N	O	Q H8	U H8	Weight (kg)

Specifications

Order No.	No.	B	C	D	M	N	O	V	W	Weight (kg)
115314	TGV04-20045	450	200.8	99.6	125	85	3	0.07	0.07	126
115315	TGV04-25050	500	250.8	74.6	125	100	3	0.07	0.07	160
115316	TGV04-20055	550	200.8	99.6	150	100	3	0.07	0.08	147
115317	TGV04-25055	550	250.8	74.6	150	100	3	0.07	0.08	174
115318	TGV04-25060	600	250.8	74.6	125	100	4	0.07	0.08	184
115319	TGV05-25055	550	250.8	124.6	150	100	3	0.07	0.08	209
115320	TGV05-30055	550	300.8	99.6	150	100	3	0.07	0.08	235
115321	TGV05-35055	550	350.8	74.6	150	100	3	0.07	0.08	261
115322	TGV05-30065	650	300.8	99.6	150	100	4	0.07	0.09	267
115323	TGV05-25070	700	250.8	124.6	125	100	5	0.07	0.09	243
115324	TGV06-30060	600	301	164.5	150	125	3	0.07	0.08	314
115325	TGV06-45060	600	451	89.5	150	125	3	0.07	0.08	401
115326	TGV06-40070	700	401	114.5	125	125	4	0.07	0.09	417
115327	TGV06-30075	750	301	164.5	150	125	4	0.07	0.09	363
115328	TGV06-45075	750	451	89.5	150	125	4	0.07	0.09	479
115329	TGV08-40070	700	401	199.5	150	150	3	0.07	0.09	610
115330	TGV08-50080	800	501	149.5	150	140	4	0.07	0.12	792
115331	TGV08-55090	900	551	124.5	150	150	4	0.07	0.12	950
115332	TGV10-50085	850	501	249.5	160	145	4	0.12	0.12	1129
115333	TGV10-60105	1050	601	199.5	160	160	5	0.12	0.12	1544

* Custom-made products to suit your specifications are also available.

Base Elements
Clamp Units
Clamping Parts
Machine Vises
Drilling Vises
Vibration Isolation
Surface Plates and Measurement Instruments
Index

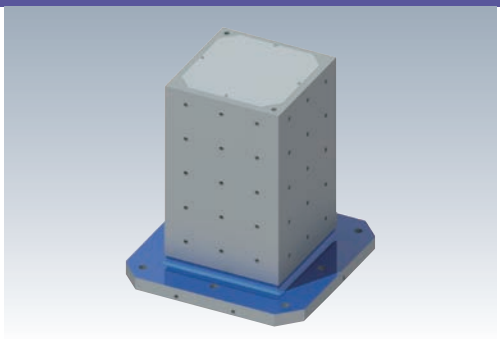

RoHS Compliant

No.E-159

MC Tooling Blocks (4 Faces/Standard Tapped Holes Type)

Material FC250 Heat Treatment Annealing

Surface Treatment Painting (Cast Surface)

Accessories Top Plates, Set Screws for Top Plate, Eye Bolts

- Type with T-slots and U-slots in addition to the standard specifications.
- 0.4-0.5mm of self-cut allowance is included on the used surface.
- The same accuracy as the machine you are using is possible from the self-cut.
- Bottom and 2 adjacent edge locator surfaces can be ground finish, and top surface of base plate can be machined finish as options.

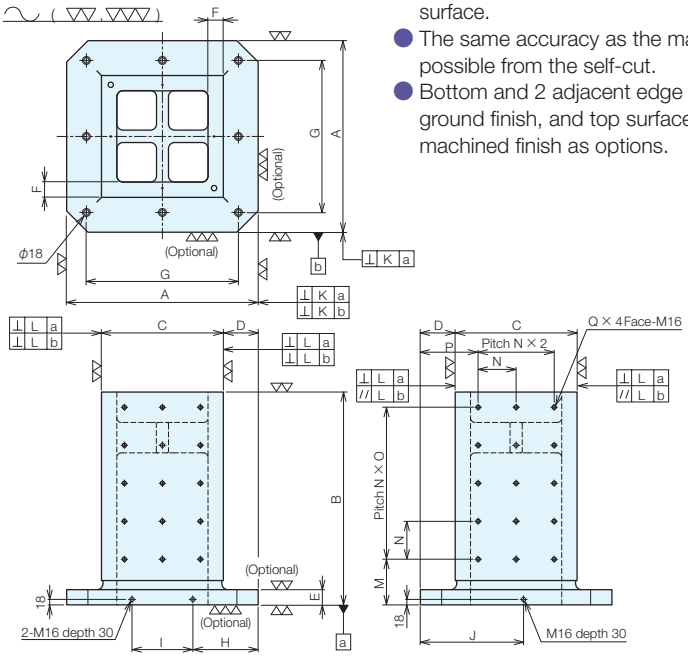

Size Chart

No.	A	E	F	G	Number of Mounting Holes	H	I	J	K	L
TPH04-*****	400	50	50	320	4	145	110	225	0.02/300	0.02/300
TPH05-*****	500	50	50	400	4	175	150	275	0.02/300	0.02/300
TPH06-*****	630	50	50	500	8	215	200	340	0.02/300	0.02/300
TPH08-*****	800	50	50	640	8	265	270	425	0.02/300	0.02/300

Optional Ground Finish and Machined Finish

No.	K	L	
☐ 400	0.01/500	0.01/300	
☐ 500	0.01/500	0.01/300	
☐ 630	0.01/500	0.01/300	
☐ 800	0.01/500	0.01/300	

Please specify your desired dimensions and weight.

Palette Size	B	C	M

N	O	P	Used Surface Tapping Hole Diameter	Weight (kg)

Specifications

Order No.	No.	B	C	D	M	N	O	P	Q	Weight (kg)	
115334	TPH04-20045	450	200.8	99.6	100	75	4	125	15	138	
115335	TPH04-25050	500	250.8	74.6	125	75	4	125	15	178	
115336	TPH04-20055	550	200.8	99.6	100	75	5	125	18	160	
115337	TPH04-25055	550	250.8	74.6	125	75	5	125	18	192	
115338	TPH04-25060	600	250.8	74.6	150	75	5	125	18	207	
115339	TPH05-25055	550	250.8	124.6	150	100	3	150	12	228	
115340	TPH05-30055	550	300.8	99.6	150	100	3	150	12	259	
115341	TPH05-35055	550	350.8	74.6	150	100	3	150	12	289	
115342	TPH05-30065	650	300.8	99.6	150	100	4	150	15	296	
115343	TPH05-25070	700	250.8	124.6	125	100	5	150	18	272	
115344	TPH06-30060	600	301	164.5	150	125	3	190	12	338	
115345	TPH06-45060	600	451	89.5	150	125	3	190	12	437	
115346	TPH06-40070	700	401	114.5	150	125	4	190	15	457	
115347	TPH06-30075	750	301	164.5	150	125	3	190	12	393	
115348	TPH06-45075	750	451	89.5	150	125	4	190	15	525	
115349	TPH08-40070	700	401	199.5	150	150	3	250	12	643	
115350	TPH08-50080	800	501	149.5	150	150	4	250	15	844	
115351	TPH08-55090	900	551	124.5	150	150	4	250	15	1009	

* Custom-made products to suit your specifications are also available.

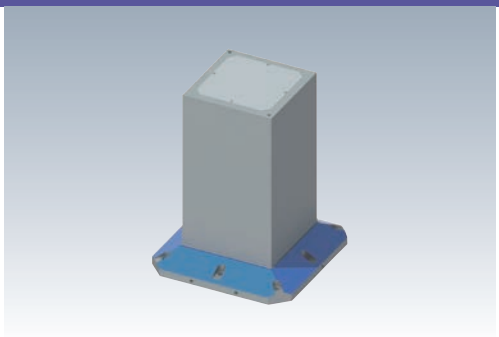

RoHS Compliant

No.E-159L

MC Tooling Blocks (4 Faces/Light Weight Type)

Material FCD600 **Heat Treatment** Annealing

Surface Treatment Painting (Cast Surface)

Accessories Top Plates, Set Screws for Top Plate, Eye Bolts

- Angle plate that delivers light weight while ensuring rigidity by using slanted surfaces and a rib structure.
- Shape that makes it hard for chips to remain.
- 0.4-0.5mm of self-cut allowance is included on the used surface.
- The same accuracy as the machine you are using is possible from the self-cut.
- Your preferred machining such as tapping and grooves can be done using the machine you are using.
- Bottom and 2 adjacent edge locator surfaces can be ground finish as options.

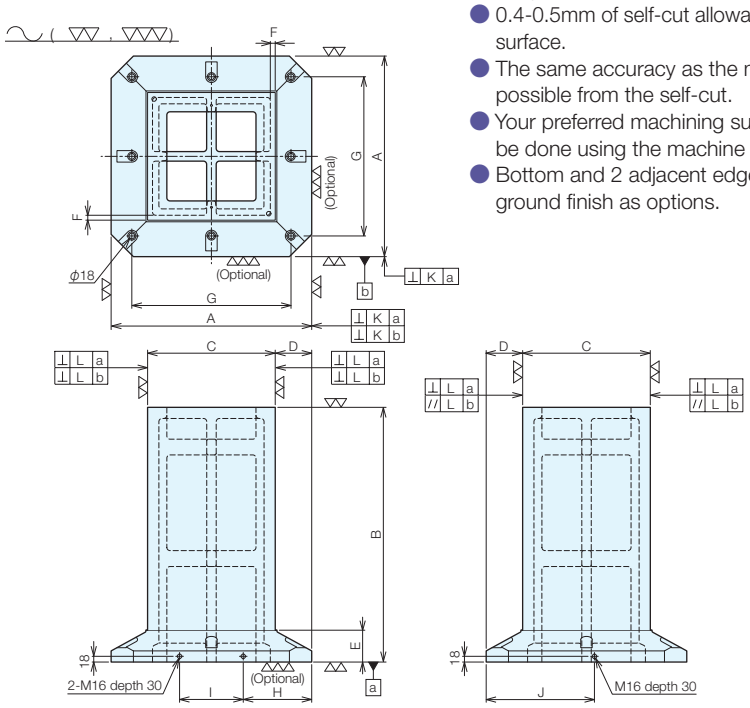

Size Chart

No.	A	F	G	Number of Mounting Holes	H	I	J	K	L
TBL03-*****	300	20	-	0	-	-	-	0.02/300	0.02/300
TBL04-*****	400	25	320	4	145	110	225	0.02/300	0.02/300
TBL05-*****	500	25	400	4	175	150	275	0.02/300	0.02/300
TBL06-*****	630	35	500	8	215	200	340	0.02/300	0.02/300
TBL08-*****	800	35	640	8	265	270	425	0.02/300	0.02/300

Optional - Ground Finish

No.	K	L	
☐ **300**	0.01/500	0.01/300	
☐ **400**	0.01/500	0.01/300	
☐ **500 (Up to height 800)**	0.01/500	0.01/300	
☐ **500 (Height 850 and over)**	0.01/500	0.01/300	
☐ **630 (up to height 800)**	0.01/500	0.01/300	
☐ **630 (height 850 or more)**	0.01/500	0.01/300	
☐ **800**	0.01/500	0.01/300	

Specifications

Order No.	No.	B	C	D	E	Weight (kg)	
115352	**TBL03-15035**	350	150.8	74.6	65	43	
115353	**TBL04-25055**	550	250.8	74.6	85	139	
115354	**TBL04-25060**	600	250.8	74.6	85	148	
115355	**TBL04-22065**	650	225.8	87.1	85	146	
115356	**TBL04-25065**	650	250.8	74.6	85	157	
115357	**TBL04-20070**	700	200.8	99.6	85	142	
115358	**TBL04-22070**	700	225.8	87.1	85	154	

Base Elements
Clamp Units
Clamping Parts
Machine Vises
Drilling Vises
Vibration Isolation
Surface Plates and Measurement Instruments
Index

Order No.	No.	B	C	D	E	Weight (kg)	
115359	TBL04-25070	700	250.8	74.6	85	166	
115360	TBL05-35055	550	350.8	74.6	80	198	
115361	TBL05-35060	600	350.8	74.6	80	210	
115362	TBL05-30065	650	300.8	99.6	100	219	
115363	TBL05-35065	650	350.8	74.6	80	223	
115364	TBL05-30070	700	300.8	99.6	100	221	
115365	TBL05-35070	700	350.8	74.6	80	235	
115366	TBL05-25075	750	250.8	124.6	100	204	
115367	TBL05-30075	750	300.8	99.6	100	232	
115368	TBL05-35075	750	350.8	74.6	80	248	
115369	TBL05-25080	800	250.8	124.6	100	213	
115370	TBL05-30080	800	300.8	99.6	100	243	
115371	TBL05-35080	800	350.8	74.6	80	260	
115372	TBL05-25085	850	250.8	124.6	100	222	
115373	TBL05-30085	850	300.8	99.6	100	253	
115374	TBL05-35085	850	350.8	74.6	80	273	
115375	TBL05-25090	900	250.8	124.6	100	231	
115376	TBL05-30090	900	300.8	99.6	100	264	
115377	TBL05-35090	900	350.8	74.6	80	285	
115378	TBL06-45070	700	451	89.5	90	411	
115379	TBL06-45075	750	451	89.5	90	434	
115380	TBL06-40080	800	401	114.5	100	427	
115381	TBL06-45080	800	451	89.5	90	456	
115382	TBL06-40085	850	401	114.5	100	447	
115383	TBL06-45085	850	451	89.5	90	478	
115384	TBL06-35090	900	351	139.5	110	429	
115385	TBL06-40090	900	401	114.5	100	467	
115386	TBL06-45090	900	451	89.5	90	501	
115387	TBL06-35095	950	351	139.5	110	446	
115388	TBL06-40095	950	401	114.5	100	487	
115389	TBL06-45095	950	451	89.5	90	523	
115390	TBL06-35100	1000	351	139.5	110	462	
115391	TBL06-40100	1000	401	114.5	100	505	
115392	TBL06-45100	1000	451	89.5	90	545	
115393	TBL08-55080	800	551	124.5	110	636	
115394	TBL08-50085	850	501	149.5	120	633	
115395	TBL08-55085	850	551	124.5	110	663	
115396	TBL08-50090	900	501	149.5	120	658	
115397	TBL08-55090	900	551	124.5	110	691	
115398	TBL08-45095	950	451	174.5	130	646	
115399	TBL08-50095	950	501	149.5	120	683	
115400	TBL08-55095	950	551	124.5	110	718	
115401	TBL08-45100	1000	451	174.5	130	668	
115402	TBL08-50100	1000	501	149.5	120	707	
115403	TBL08-55100	1000	551	124.5	110	746	
115404	TBL08-45105	1050	451	174.5	130	690	
115405	TBL08-50105	1050	501	149.5	120	732	
115406	TBL08-55105	1050	551	124.5	110	773	
115407	TBL08-40110	1100	401	199.5	140	667	
115408	TBL08-45110	1100	451	174.5	130	713	
115409	TBL08-50110	1100	501	149.5	120	757	
115410	TBL08-55110	1100	551	124.5	110	800	
115411	TBL08-40120	1200	401	199.5	140	706	
115412	TBL08-45120	1200	451	174.5	130	757	
115413	TBL08-50120	1200	501	149.5	120	807	
115414	TBL08-55120	1200	551	124.5	120	855	

* Custom-made products to suit your specifications are also available.

Please specify your desired dimensions and weight.

Palette Size	B	C	Weight (kg)

Base Elements
Clamp Units
Clamping Parts
Machine Vises
Drilling Vises
Vibration Isolation
Surface Plates and Measurement Instruments
Index

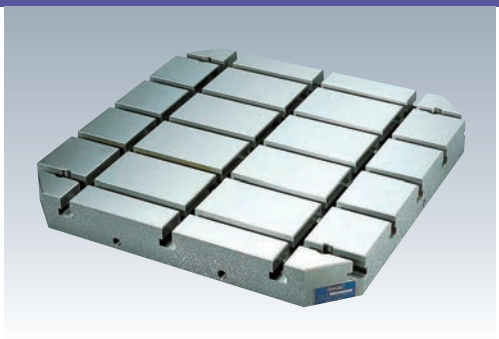

RoHS Compliant

ERON

No.E-169

MC Pallet Sub Tables (T-Slot Type)

Material FC 250 Heat Treatment Annealing

Surface Treatment Painting (Cast Surface)

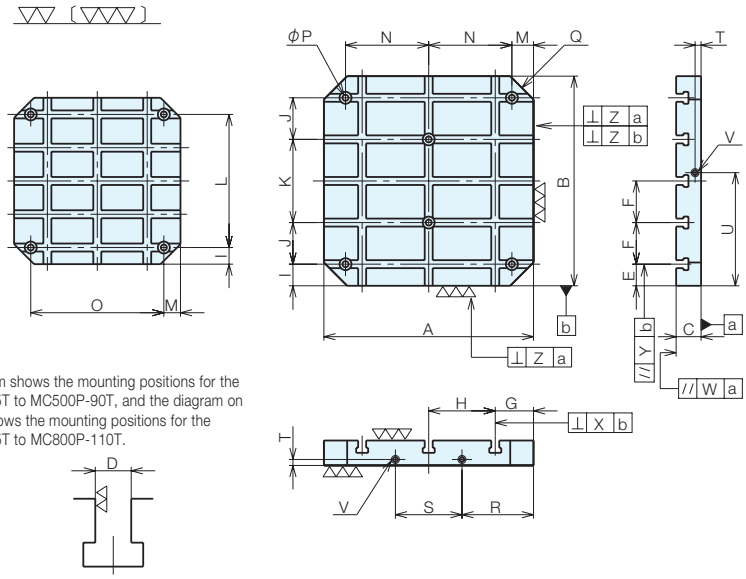

This diagram shows the mounting positions for the MC400P-75T to MC500P-90T, and the diagram on the right shows the mounting positions for the MC600P-75T to MC800P-110T.

Specifications

Order No.	No.	A × B × C	D^{H8}	E	F	G	H	I	J	K	L	M
03766	MC400P-75T	400 × 400 × 75	18	40	80	75	125	40	-	-	320	40
03767	MC400P-90T	400 × 400 × 90	18	40	80	75	125	40	-	-	320	40
03768	MC500P-75T	500 × 500 × 75	18	50	100	100	150	50	-	-	400	50
03769	MC500P-90T	500 × 500 × 90	18	50	100	100	150	50	-	-	400	50
03770	MC630P-75T	630 × 630 × 75	18	65	125	115	200	65	125	250	-	65
03771	MC630P-100T	630 × 630 × 100	18	65	125	115	200	65	125	250	-	65
03772	MC800P-75T	800 × 800 × 75	18	80	160	150	250	80	160	320	-	80
03773	MC800P-110T	800 × 800 × 110	18	80	160	150	250	80	160	320	-	80

No.	N	O	P	Q	R	S	T	U	V	W	X	Y	Z	Weight (kg)
MC400P-75T	-	320	18	C 50	145	110	18	225	M16	0.02	0.05	0.05	0.01	65
MC400P-90T	-	320	18	C 50	145	110	18	225	M16	0.02	0.05	0.05	0.01	79
MC500P-75T	-	400	18	C 60	175	150	18	275	M16	0.02	0.05	0.05	0.01	105
MC500P-90T	-	400	18	C 60	175	150	18	275	M16	0.02	0.05	0.05	0.01	126
MC630P-75T	250	-	18	C 70	215	200	18	340	M16	0.02	0.05	0.05	0.01	177
MC630P-100T	250	-	18	C 70	215	200	18	340	M16	0.02	0.05	0.05	0.01	240
MC800P-75T	320	-	18	C100	265	270	18	425	M16	0.02	0.05	0.05	0.01	289
MC800P-110T	320	-	18	C100	265	270	18	425	M16	0.02	0.05	0.05	0.01	402

Base Elements
Clamp Units
Clamping Parts
Machine Vises
Drilling Vises
Vibration Isolation
Surface Plates and Measurement Instruments
Index

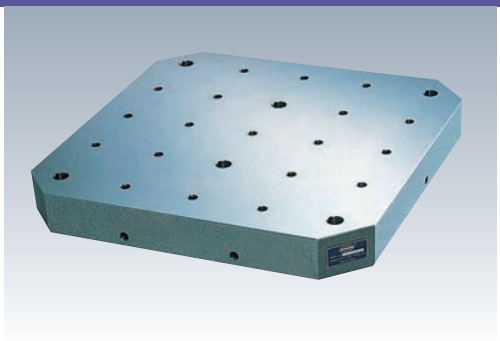

RoHS Compliant

ERON

No.E-169

MC Pallet Sub Tables (Tapped Holes Type)

Material FC 250 Heat Treatment Annealing

Surface Treatment Painting (Cast Surface)

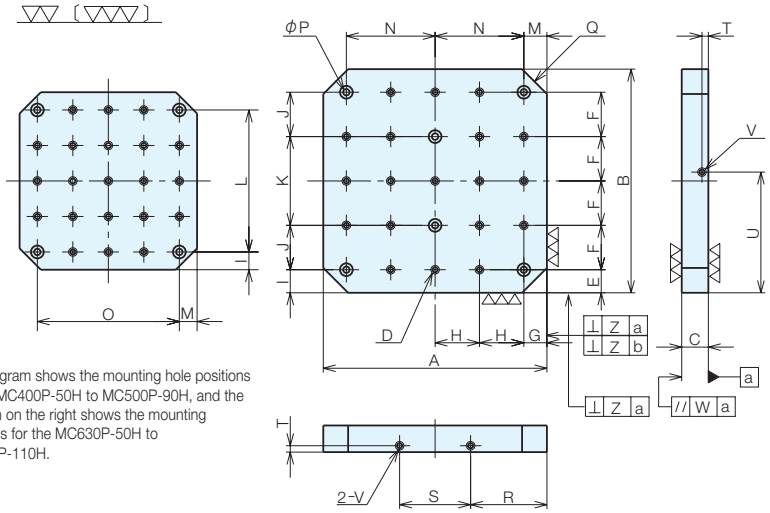

This diagram shows the mounting hole positions for the MC400P-50H to MC500P-90H, and the diagram on the right shows the mounting positions for the MC630P-50H to MC800P-110H.

Specifications

Order No.	No.	A×B×C	D	E	F	G	H	I	J	K	L
03774	MC400P-50H	400×400×50	M16×2×21	40	80	40	80	40	-	-	320
03775	MC400P-75H	400×400×75	M16×2×21	40	80	40	80	40	-	-	320
03776	MC400P-90H	400×400×90	M16×2×21	40	80	40	80	40	-	-	320
03777	MC500P-50H	500×500×50	M16×2×21	50	100	50	100	50	-	-	400
03778	MC500P-75H	500×500×75	M16×2×21	50	100	50	100	50	-	-	400
03779	MC500P-90H	500×500×90	M16×2×21	50	100	50	100	50	-	-	400
03780	MC630P-50H	630×630×50	M16×2×19	65	125	65	125	65	125	250	-
03781	MC630P-75H	630×630×75	M16×2×19	65	125	65	125	65	125	250	-
03782	MC630P-100H	630×630×100	M16×2×19	65	125	65	125	65	125	250	-
03783	MC800P-50H	800×800×50	M16×2×19	80	160	80	160	80	160	320	-
03784	MC800P-75H	800×800×75	M16×2×19	80	160	80	160	80	160	320	-
03785	MC800P-110H	800×800×110	M16×2×19	80	160	80	160	80	160	320	-

No.	M	N	O	P	Q	R	S	T	U	V	W	Z	Weight (kg)
MC400P-50H	40	-	320	18	C 50	145	110	18	225	M16	0.02	0.01	55
MC400P-75H	40	-	320	18	C 50	145	110	18	225	M16	0.02	0.01	80
MC400P-90H	40	-	320	18	C 50	145	110	18	225	M16	0.02	0.01	94
MC500P-50H	50	-	400	18	C 60	175	150	18	275	M16	0.02	0.01	86
MC500P-75H	50	-	400	18	C 60	175	150	18	275	M16	0.02	0.01	124
MC500P-90H	50	-	400	18	C 60	175	150	18	275	M16	0.02	0.01	145
MC630P-50H	65	250	-	18	C 70	215	200	18	340	M16	0.02	0.01	139
MC630P-75H	65	250	-	18	C 70	215	200	18	340	M16	0.02	0.01	202
MC630P-100H	65	250	-	18	C 70	215	200	18	340	M16	0.02	0.01	264
MC800P-50H	80	320	-	18	C100	265	270	18	425	M16	0.02	0.01	222
MC800P-75H	80	320	-	18	C100	265	270	18	425	M16	0.02	0.01	322
MC800P-110H	80	320	-	18	C100	265	270	18	425	M16	0.02	0.01	434

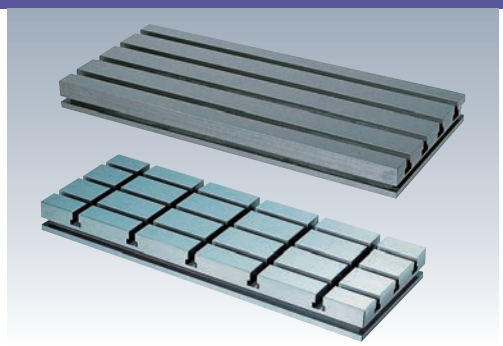

RoHS Compliant

ERON®

No.E-162

MC Machine Sub-Plates

Material FC 250 Heat Treatment Annealing

Surface Treatment Painting (Cast Surface)

- Uses high quality casting with full annealing.
- Attaches to the machine table using grooves on the outer side face.
- Machining of mounting holes at the top is also performed to suit the T-slot of the machine table.
- Custom made products are also available.

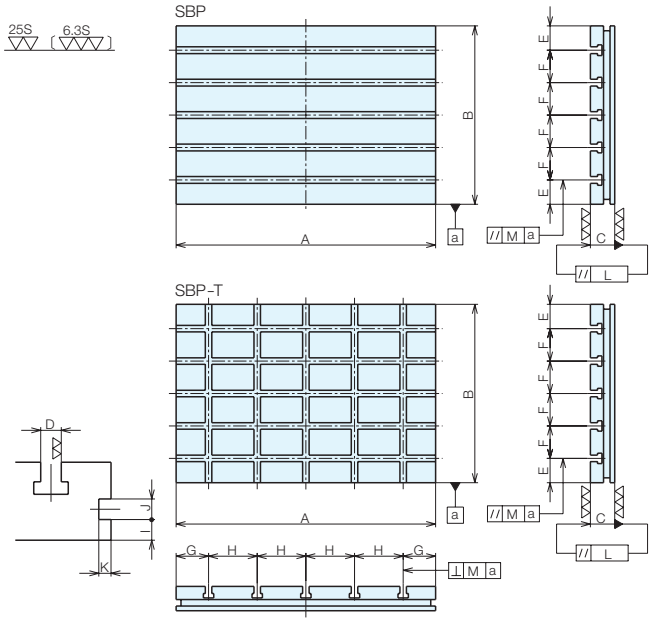

Specifications

Order No.	No.	A × B × C	D^{H8}	E	F	I	J	K	L	M	Number of T-slots	Weight (kg)
26922	SBP-0540	550 × 400 × 50	14	75	125	12	17	12	0.02	0.05	3	65
26923	SBP-0626	600 × 260 × 50	14	50	80	12	17	12	0.02	0.05	3	44
26924	SBP-0645	600 × 450 × 75	18	75	100	17	17	15	0.02	0.05	4	112
26925	SBP-0830	800 × 300 × 75	16	60	90	16	17	15	0.02	0.05	3	101
26926	SBP-0855	800 × 550 × 75	18	75	100	17	17	15	0.02	0.05	5	180
26927	SBP-0950	900 × 500 × 75	18	50	100	17	17	15	0.02	0.05	5	185
26928	SBP-0960	900 × 600 × 90	18	60	120	20	22	20	0.02	0.05	5	253
26929	SBP-1060	1000 × 600 × 95	18	60	120	20	22	20	0.02	0.05	5	301
26930	SBP-1260	1200 × 600 × 95	18	100	100	20	22	20	0.02	0.05	5	360
26931	SBP-1355	1300 × 550 × 95	18	75	100	20	22	20	0.02	0.05	5	364
26932	SBP-1570	1500 × 700 × 95	18	110	120	20	22	20	0.02	0.05	5	551

Order No.	No.	A × B × C	D^{H8}	E	F	G	H	I	J	K	L	M	Number of T-slots	Weight (kg)
26933	SBP-0540T	550 × 400 × 50	14	75	125	75	100	12	17	12	0.02	0.05	3 × 5	59
26934	SBP-0626T	600 × 260 × 50	14	50	80	50	125	12	17	12	0.02	0.05	3 × 5	40
26935	SBP-0645T	600 × 450 × 75	18	75	100	50	125	17	17	15	0.02	0.05	4 × 5	100
26936	SBP-0830T	800 × 300 × 75	16	60	90	100	150	16	17	15	0.02	0.05	3 × 5	95
26937	SBP-0855T	800 × 550 × 75	18	75	100	100	150	17	17	15	0.02	0.05	5 × 5	165
26938	SBP-0950T	900 × 500 × 75	18	50	100	100	175	17	17	15	0.02	0.05	5 × 5	172
26939	SBP-0960T	900 × 600 × 90	18	60	120	100	175	20	22	20	0.02	0.05	5 × 5	237
26940	SBP-1060T	1000 × 600 × 95	18	60	120	100	200	20	22	20	0.02	0.05	5 × 5	290
26941	SBP-1260T	1200 × 600 × 95	18	100	100	100	250	20	22	20	0.02	0.05	5 × 5	344
26942	SBP-1355T	1300 × 550 × 95	18	75	100	150	250	20	22	20	0.02	0.05	5 × 5	349
26943	SBP-1570T	1500 × 700 × 95	18	110	120	150	300	20	22	20	0.02	0.05	5 × 5	532

Base Elements
Clamp Units
Clamping Parts
Machine Vises
Drilling Vises
Vibration Isolation
Surface Plates and Measurement Instruments
Index

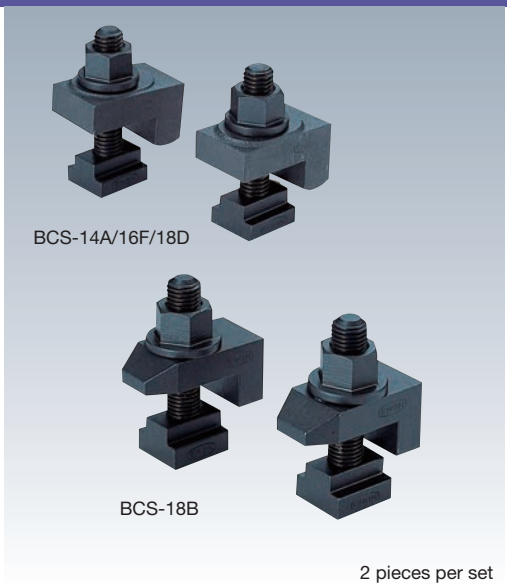

2 pieces per set

RoHS Compliant

ERON®

No.E-423S

Clamping Sets

Material S45C Heat Treatment Heat treatment

Surface Treatment Blackened

● Clamping sets for MC machine sub-plates.

BCS-14A/16F/18D

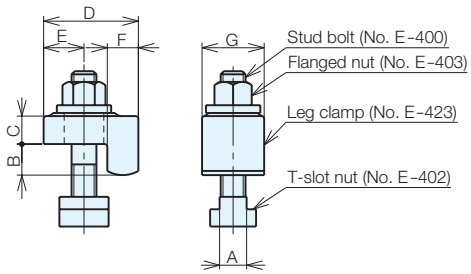

BCS-18B

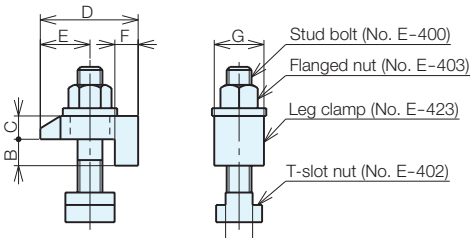

Specifications

Order No.	No.	Compatible T-slot Width: A	Compatible Models
35853	**BCS-14A**	14	SBP-0540/0626 (T)
35860	**BCS- 16F**	16	SBP-0830 (T)
35862	**BCS-18B**	18	SBP-0645/0855/0950 (T)
35864	**BCS-18D**	18	SBP-0960/1060/1260/1355/1570 (T)

No.	B	C	D	E	F	Details			
						Leg Clamps	T-Slot Nuts	Stud Bolts	Flanged Nuts
BCS-14A	12	12	42	14-22.5	12	LC12	TNM1412	BM01275	FNM0012
BCS-16F	16	16	54	18-28.5	16	LC14	TNM1614	BM01475	FNM0014
BCS-18B	17	15	61	28-36	15	LCMC161	TNM1816	BM16100	FNM0016
BCS-18D	20	20	63	22-30	20	LC16	TNM1816	BM16100	FNM0016

* You should use at least 2 sets (4 pieces) for attaching to MC machine sub-plates.

Base Elements
Clamp Units
Clamping Parts
Machine Vises
Drilling Vises
Vibration Isolation
Surface Plates and Measurement Instruments
Index

Q-Lock Elements

- Double contact system jig setup element offering the triple combination of "high speed", "high accuracy", and "high rigidity" for jig replacement work and locating.
- Can be used combined with existing jigs.
- Supports automatic jig replacement.

Set-up of the Jigs in Seconds

Available in 3 types: Screw type, pneumatic type, and hydraulic type.

The use of a Q-lock element makes it possible for anyone to perform high accuracy jig locating and clamping in a short time. A side operation type has been added to the hydraulic type, screw type, and spring type, giving you the choice of products to suit your application.

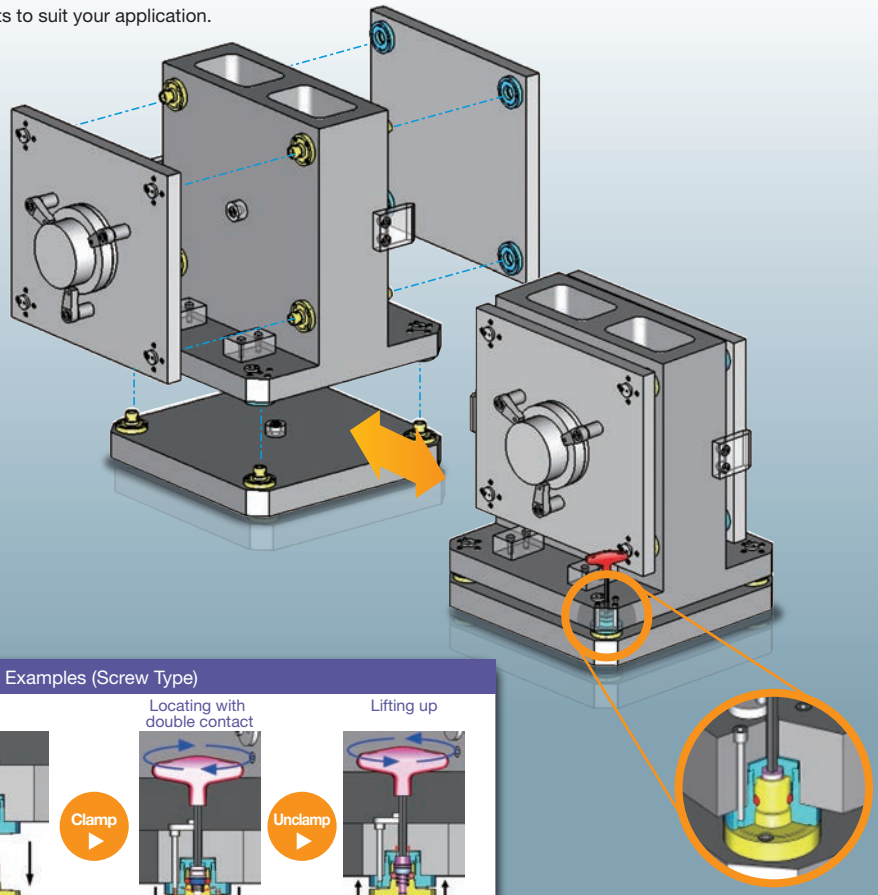

Reference Examples (Screw Type)

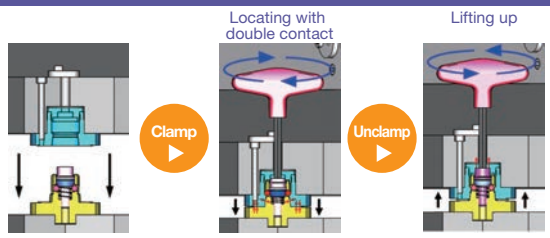

Base Elements
Clamp Units
Clamping Parts
Machine Vises
Drilling Vises
Vibration Isolation
Surface Plates and Measurement Instruments
Index

Product Lineup (Q-Lock Elements/Pins)

Multi piece type Position repeatability accuracy within 3μm.

Screw Type

Standard Type

Secure fixing using a wedge type mechanical locking mechanism. Compact with outside diameters starting from ϕ45, making it suitable for combination with small jig plates.

Model	Outside Diameter	Clamping Force	Torque
QLT19	45	7	9N·m
QLT26	58	10	11N·m
QLT32	72	16	35N·m
QLT40	88	25	47N·m

P.31

Quick Type

Can be clamped with a single revolution, reducing operation time.

Model	Outside Diameter	Clamping Force	Torque
QLTF19	45	7	14N·m
QLTF26	58	10	18N·m
QLTF32	72	16	60N·m
QLTF40	88	25	70N·m

P.31

Side Operation Type

If the Q-lock element cannot be operated from the top face of the jig plate, it can be operated from the side face.

Model	Outside Diameter	Clamping Force	Torque
QLTS26	70	8	23N·m
QLTS40	108	20	80N·m

P.32

Clutch Type

Has a built-in clutch that prevents problems due to over-tightening the Q-lock element.

Model	Outside Diameter	Clamping Force
QLTC26	58	10

P.32

Pneumatic Type

Double Acting

Air supply is used for clamping and unclamping. Automatic replacement of jigs is supported by changing the valve. A system can be built easily by using the air pipes within a factory.

Model	Outside Diameter	Clamping Force	Torque
QLA19	79	1.4	0.5 MPa
QLA26	104	2	

With air blow and mounting confirmation

For vertical machining centers and light cutting

P.34

Hydraulic Type

Double Acting (Clamped by Hydraulic Pressure)

Uses hydraulics for clamping and unclamping. Automatic replacement of jigs is supported by changing the valve.

Model	Outside Diameter	Clamping Force	Torque
QLHM03	-	3	5 MPa
QLHM07	-	7	
QLHM10	-	10	
QLHM16	-	16	
QLHM25	-	25	

With air blow and mounting confirmation

For heavy cutting with strong clamping

P.38

Single Acting (Clamped by Spring)

Uses a conical spring washer for clamping, and hydraulics only for unclamping. This eliminates problems such as due to oil leaks, temperature variations, and line breakages while clamped.

Model	Outside Diameter	Clamping Force	Torque
QLSM03	-	3	5 MPa
QLSM07	-	7	
QLSM10	-	10	
QLSM16	-	16	

With air blow and mounting confirmation

For heavy cutting with strong clamping

P.36

Base Elements
Clamp Units
Clamping Parts
Machine Vises
Drilling Vises
Vibration Isolation
Surface Plates and Measurement Instruments
Index

Examples of Basic Layouts

QLT(F)19

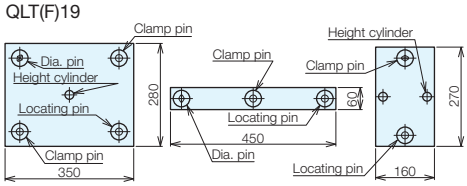

QLT(F)26

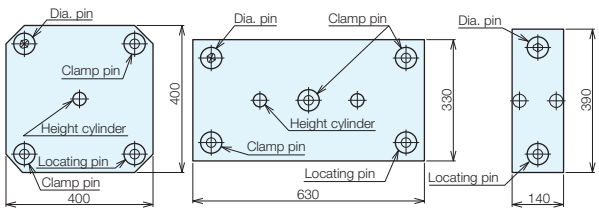

QLTS26 (side)

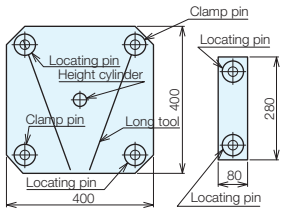

QLT(F)32

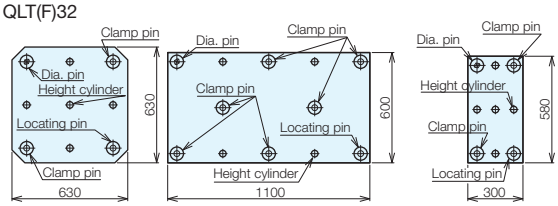

QLT(F)40

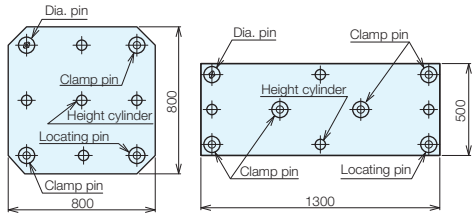

QLTS40 (side)

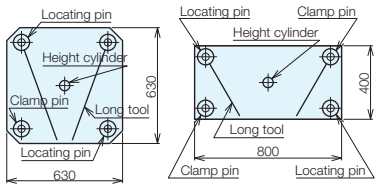

Examples of Piping for Pneumatics and Hydraulics

■Manifold Type

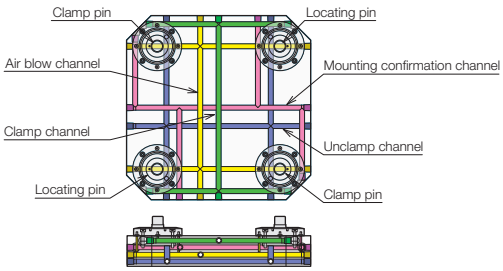

■External Piping Type

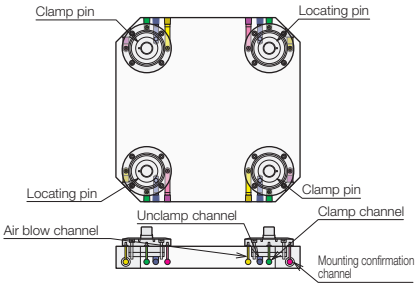

Features

Locating

The locating bush is located by fastening the base plate and jig plate and then fixing the mounting screw for the locating bush from the top surface, making it easy to improve the mounting pitch accuracy even for several plates.

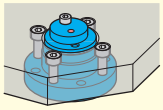

The bush is temporary tightened from the top surface of the jig plate using mounting screws.

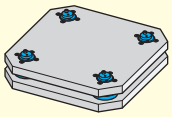

The base plate and jig plate are fastened using the Q-lock element, and then the mounting screws for the bushes are fully tightened.

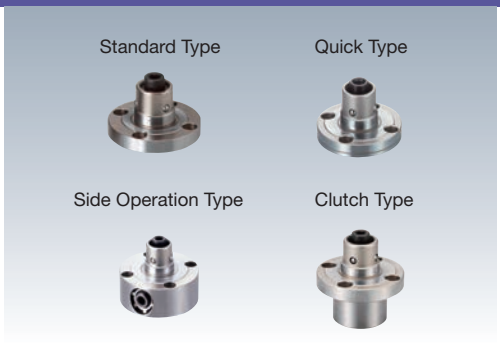

RoHS Compliant

ERON

No.E-659C

Q-Lock Elements/Pins (Screw Type)

Material Main body: SCM440 Steel balls: SUJ2

Heat Treatment Main body: HRC55 heat treatment
Steel balls: HRC62 heat treatment

Types and External Dimensions

Standard Type/Quick Type

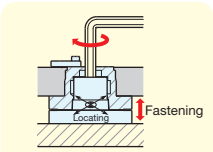

One-action operation

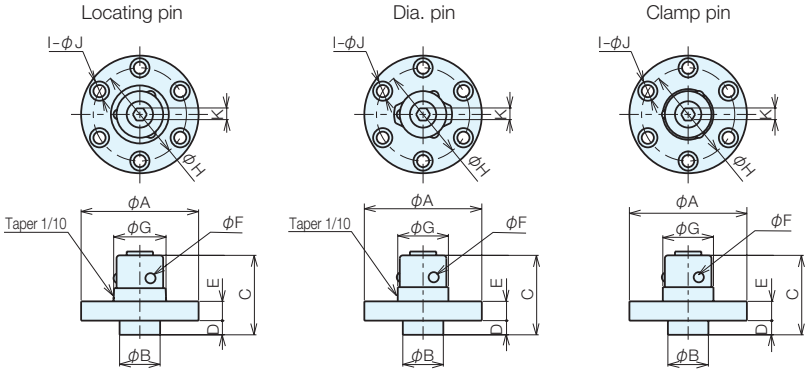

Pin (Standard Type) Specifications

Type	Order No.	No.	A	B $^{-0.003}_{-0.013}$	C	D	E ±0.005	F	G	H	I	J	K	Weight (g)
Locating pin	**66261**	**QLT19RP**	45	15	31.3	6	7	4	19	36	4	4.5	5	110
	66262	**QLT26RP**	58	20	39.2	7	10	5	26	46	4	6	6	260
	66263	**QLT32RP**	72	25	49	8.5	12	6	32	58	4	7	8	500
	67647	**QLT40RP**	88	28	59	9.5	15	7	40	72	6	7	10	950
Dia. pin	**66258**	**QLT19DP**	45	15	31.3	6	7	4	19	36	4	4.5	5	110
	66259	**QLT26DP**	58	20	39.2	7	10	5	26	46	4	6	6	260
	66260	**QLT32DP**	72	25	49	8.5	12	6	32	58	4	7	8	500
	67648	**QLT40DP**	88	28	59	9.5	15	7	40	72	6	7	10	950
Clamp pin	**66255**	**QLT19CP**	45	15	31.3	6	7	4	17.8	36	4	4.5	5	110
	66256	**QLT26CP**	58	20	39.2	7	10	5	25	46	4	6	6	260
	66257	**QLT32CP**	72	25	49	8.5	12	6	30	58	4	7	8	500
	67649	**QLT40CP**	88	28	59	9.5	15	7	37	72	6	7	10	950

Pin (Quick Type) Specifications

Type	Order No.	No.	A	B $^{-0.003}_{-0.013}$	C	D	E ±0.005	F	G	H	I	J	K	Weight (g)
Locating pin	**91492**	**QLTF19RP**	45	15	31.3	6	7	4	19	36	4	4.5	5	110
	91493	**QLTF26RP**	58	20	39.2	7	10	5	26	46	4	6	6	260
	91494	**QLTF32RP**	72	25	49	8.5	12.5	6	32	58	4	7	8	500
	91495	**QLTF40RP**	88	28	59	9.5	15	7	40	72	6	7	10	950
Dia. pin	**91496**	**QLTF19DP**	45	15	31.3	6	7	4	19	36	4	4.5	5	110
	91497	**QLTF26DP**	58	20	39.2	7	10	5	26	46	4	6	6	260
	91498	**QLTF32DP**	72	25	49	8.5	12.5	6	32	58	4	7	8	500
	91499	**QLTF40DP**	88	28	59	9.5	15	7	40	72	6	7	10	950
Clamp pin	**91500**	**QLTF19CP**	45	15	31.3	6	7	4	17.8	36	4	4.5	5	110
	91501	**QLTF26CP**	58	20	39.2	7	10	5	25	46	4	6	6	260
	91502	**QLTF32CP**	72	25	49	8.5	12.5	6	30	58	4	7	8	500
	91503	**QLTF40CP**	88	28	59	9.5	15	7	37	72	6	7	10	950

Base Elements
Clamp Units
Clamping Parts
Machine Vises
Drilling Vises
Vibration Isolation
Surface Plates and Measurement Instruments
Index

Side Operation Type

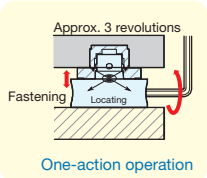

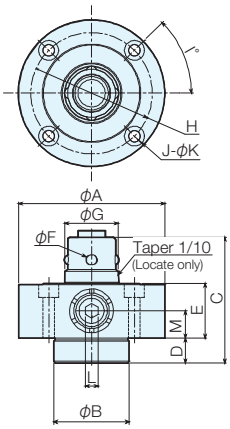

Usage Examples

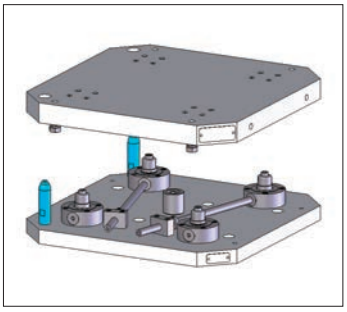

Pin (Side Operation Type) Specifications

Type	Order No.	No.	A	B $^{-0.003}_{-0.02}$	C	D	E $^{\pm 0.005}$	F	G	H	I	J	K	L	M	Weight (g)
Locating pin	**114597**	**QLTS26RPV**	70	36	60.2	12	26	5	26	58	45	4	6	6	13	770
	114598	**QLTS40RPV**	108	58	83.5	14.5	37	7	40	86	60	6	7	10	18.5	2700
Clamp pin	**114595**	**QLTS26CPV**	70	36	60.2	12	26	5	25	58	45	4	6	6	13	770
	114596	**QLTS40CPV**	108	58	83.5	14.5	37	7	37	86	60	6	7	10	18.5	2700

Clutch Type

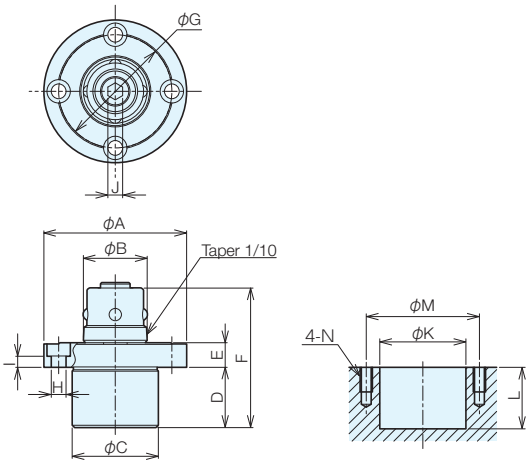

Pin (Clutch Type) Specifications

Type	Order No.	No.	A	B	C $^{-0.005}_{-0.016}$	D	E $^{\pm 0.005}$	F	G	H	I	J	Weight (g)
Locating pin	**109775**	**QLTC26RP**	58	26	36	24.5	10	56.7	46	6	4.5	6	400
Dia. pin	**109776**	**QLTC26DP**	58	26	36	24.5	10	56.7	46	6	4.5	6	400
Clamp pin	**109777**	**QLTC26CP**	58	24	36	24.5	10	56.7	46	6	4.5	6	400

Mounting Dimensions

Standard Type/Quick Type/Side Operation Type
Clutch Type

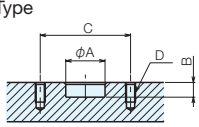

Base plate side

No.	A	B	C	D
QLT(F)19	15 $^{+0.011}_{0}$	6.5	36	4-M4 depth 8
QLT(F)26	20 $^{+0.013}_{0}$	7.5	46	4-M5 depth 10
QLT(F)32	25 $^{+0.013}_{0}$	9	58	4-M6 depth 12
QLT(F)40	28 $^{+0.013}_{0}$	10	72	6-M6 depth 12
QLTS26	36 $^{+0.016}_{0}$	12.5	58	4-M5 depth 10
QLTS40	58 $^{+0.019}_{0}$	15	86	6-M6 depth 12
QLTC26	36 $^{+0.016}_{0}$	25	46	4-M5 depth 10

Section Drawing

Standard Type/Quick Type

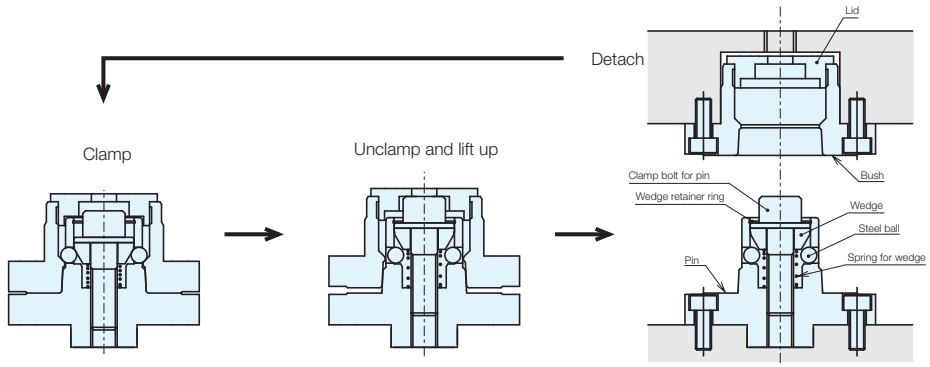

Side Operation Type

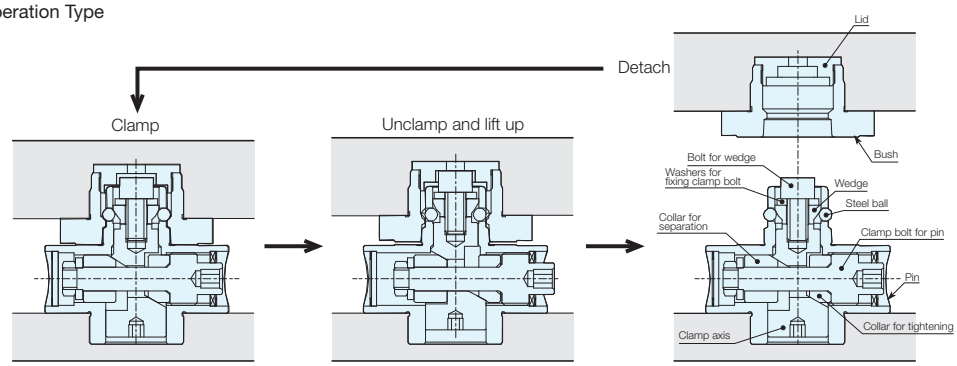

Clutch Type

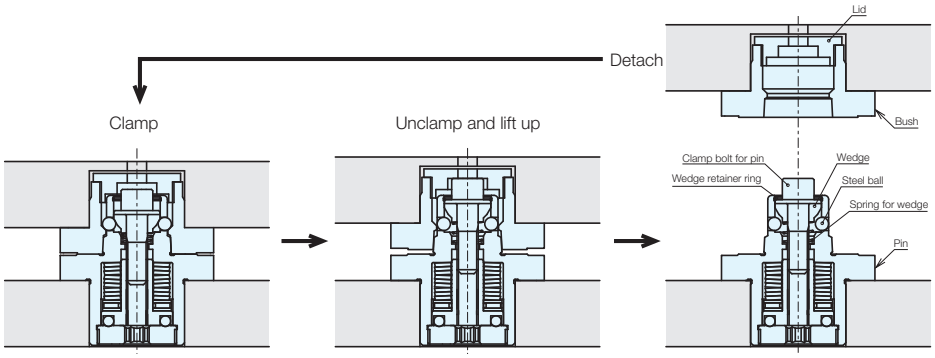

Pneumatic Type

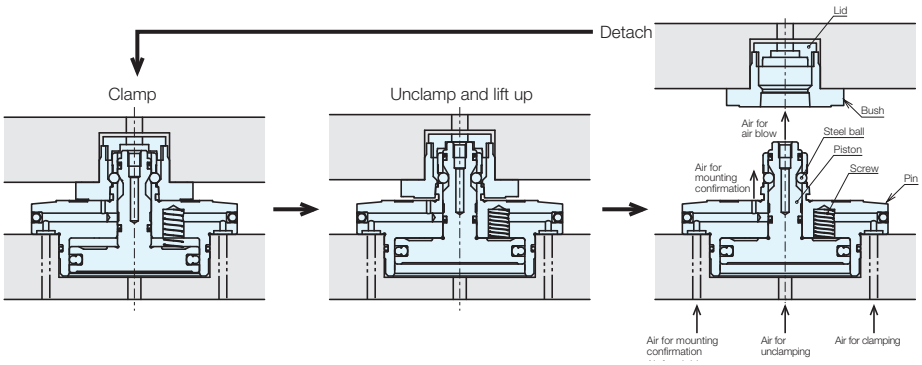

RoHS Compliant

ERON

No.E-659C

Q-Lock Elements/Pins
(Pneumatic Type)

Material Main body: SUS440C

Heat Treatment Main body: HRC55 heat treatment

Types and External Dimensions

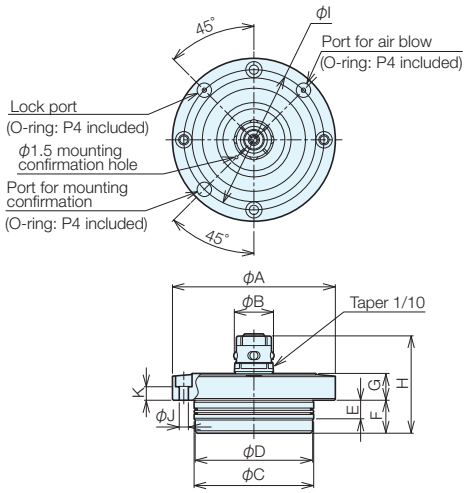

Pin (Pneumatic Type) Specifications

Type	Order No.	No.	A	B	C	D	E	F	G ±0.005	H	I	J	K	Weight (kg)
Locating pin	**109771**	**QLA19RP**	79	19	$58^{0}_{-0.013}$	57	9	16	13	47.3	68	4.5	6.5	0.7
	109772	**QLA26RP**	104	26	$78^{0}_{-0.013}$	77	9	19.5	15	56.7	90	6.6	6	1.4
Clamp pin	**109773**	**QLA19CP**	79	17.8	$58^{0}_{-0.013}$	57	9	16	13	47.3	68	4.5	6.5	0.7
	109774	**QLA26CP**	104	24	$78^{0}_{-0.013}$	77	9	19.5	15	56.7	90	6.6	6	1.4

Mounting Dimensions

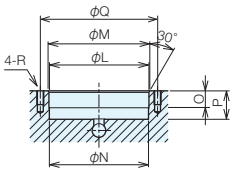

Base plate side

No.	L	M	N	O	P +0.30	Q	R
QLA19	$58^{+0.013}_{0}$	59	57.5	10	16.5	68	M4
QLA26	$78^{+0.013}_{0}$	79	77.5	10	20	90	M6

Technical Data

Type		Pneumatic Type	
Drive Method	Clamping	Spring + Pneumatic	
	Unclamp	Pneumatic	
No.		**QLA19**	**QLA26**
Clamping Force (kN) (at 0.5 MPa)		1.4	2
Liftup Force (kN/piece) (at 0.5MPa)		0.6	1.1
Clamp Stroke (mm)		3.3	4
Amount of Lift Up (mm)		1	
Cylinder Volume (cm^3)	Clamp Side	9.5	15.5
	Unclamp Side	10	22.7
Maximum Usage Pressure (MPa)		1	
Minimum Usage Pressure (MPa)		0.35	
Guaranteed Withstand Pressure (MPa)		1.5	
Recommended Air Blow Pressure (MPa)		0.5	
Used Fluid		Dry Air	
Ambient Operating Temperature (°C)		0-65	
Weight (kg)		0.7	1.4

Base Elements
Clamp Units
Clamping Parts
Machine Vises
Drilling Vises
Vibration Isolation
Surface Plates and Measurement Instruments
Index

RoHS Compliant

ERON®

No.E-659C

Q-Lock Elements/Bushes
(Screw Type/Pneumatic Type)

Material Main body: SCM440

Heat Treatment Main body: HRC55 heat treatment

Accessories Chip cover

Types and External Dimensions

Locate bush Clamp bush

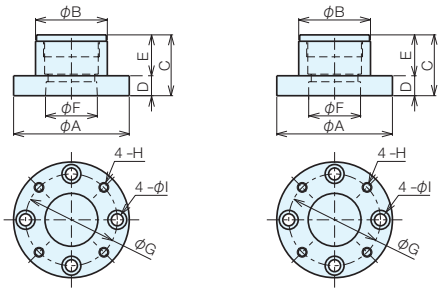

Bush Specifications

Type	Order No.	No.	A	B $^{0}_{-0.016}$	C	D ± 0.005	E	F	G	H	I	Weight (g)
Locate Bush	**66264**	**QLT19RB**	45	27	24.5	7	17.5	19	36	M4 × 0.7	4.5	110
	66265	**QLT26RB**	58	36	30.5	10	20.5	26	46	M5 × 0.8	6	250
	66266	**QLT32RB**	72	45	37.5	12	25.5	32	58	M6 × 1.0	7	470
	67650	**QLT40RB**	88	58	46.5	15	31.5	40	72	M6 × 1.0	7	1000
Clamping Bush	**66252**	**QLT19CB**	45	27	24.5	7	17.5	18.5	36	M4 × 0.7	4.5	110
	66253	**QLT26CB**	58	36	30.5	10	20.5	25.5	46	M5 × 0.8	6	250
	66254	**QLT32CB**	72	45	37.5	12	25.5	31.5	58	M6 × 1.0	7	470
	67651	**QLT40CB**	88	58	46.5	15	31.5	39.5	72	M6 × 1.0	7	1000

Mounting Dimensions

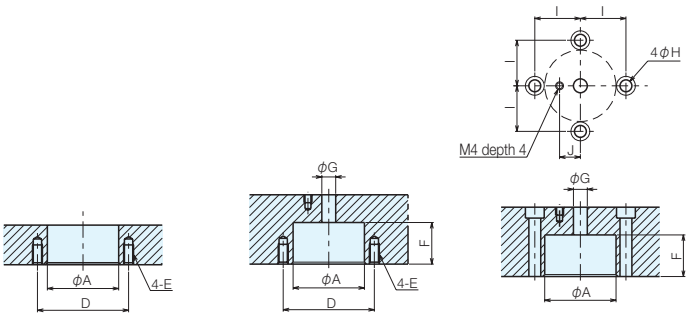

Bush side (Pattern : 1) Bush side (Pattern : 2) Bush side (Pattern : 3)

No.	A	Tolerance of A	E	F	G	H	I	J
QLT19	27	+0.033 +0.020	M4 depth 8	18.5	6.2	4.5	18	7.8
QLT26	36	+0.041 +0.025	M5 depth 10	21.5	7.3	6.0	23	10.5
QLT32	45	+0.041 +0.025	M6 depth 12	26.5	9.7	7.0	29	13.0
QLT40	58	+0.049 +0.030	M6 depth 12	32.5	12.0	7.0	36	13.0

* The pitch tolerance of ϕ A is within ± 0.01. (If ± 0.01 is exceeded, add an adjusting allowance by making the dimension of ϕ A larger to match the pitch dimension.)

RoHS Compliant

ERON®

No.E-659C

Q-Lock Elements/Pins (Hydraulic Type Single Action)

Material Main body: SCM420 Piston: SCM440
Steel balls: SUJ2

Heat Treatment Main body: HRC55 heat treatment
Piston: HRC55 heat treatment
Steel balls: HRC62 heat treatment

Clamping by spring.

Types and External Dimensions

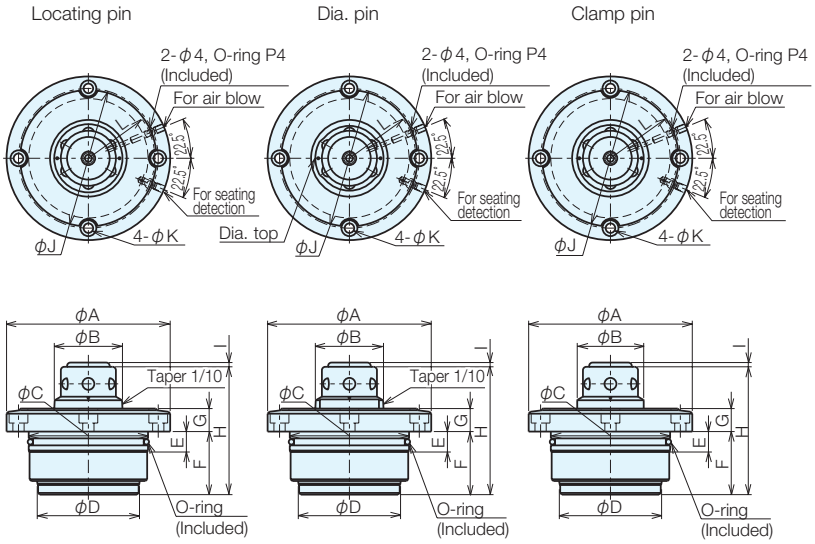

Pin (Hydraulic Type Single Action) Specifications

Type	Order No.	No.	A	B	C h5	D	E	F	G ±0.003	H	I	J	K	L	Weight (kg)
Locating pin	71075	QLSM03RP	66	32	45	37.5	10	30	12	65	1.8	54	5.5	27	0.7
	68836	QLSM07RP	96	40	70	60	12	37	13.5	75	1.8	82	6.6	41	2.1
	68837	QLSM10RP	118	48	90	75	15	43	17	88.5	2.6	102	6.6	51	4.0
	68838	QLSM16RP	132	55	100	85	15	58	18	109.5	3.3	114	9	57	5.8
Dia. Pin	71076	QLSM03DP	66	32	45	37.5	10	30	12	65	1.8	54	5.5	27	0.7
	68839	QLSM07DP	96	40	70	60	12	37	13.5	75	1.8	82	6.6	41	2.1
	68840	QLSM10DP	118	48	90	75	15	43	17	88.5	2.6	102	6.6	51	4.0
	68841	QLSM16DP	132	55	100	85	15	58	18	109.5	3.3	114	9	57	5.8
Clamp pin	71077	QLSM03CP	66	30	45	37.5	10	30	12	65	1.8	54	5.5	27	0.7
	68842	QLSM07CP	96	39	70	60	12	37	13.5	75	1.8	82	6.6	41	2.1
	68843	QLSM10CP	118	47	90	75	15	43	17	88.5	2.6	102	6.6	51	4.0
	68844	QLSM16CP	132	54	100	85	15	58	18	109.5	3.3	114	9	57	5.8

Mounting Dimensions

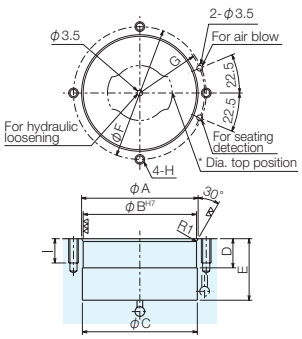

No.	A	B H7	C	D	E	F	G	H	I
QLSM03	46	45	44.5	12	32	54	27	M5	13
QLSM07	72	70	71	18	39	82	41	M6	15
QLSM10	92	90	91	20	45	102	51	M6	15
QLSM16	102	100	101	20	60	114	57	M8	20

* For dia. pins, the position between the top position and tapping hole is as shown in the diagram, and the tapping holes and port holes should be machined to suit the direction of the dia.

Base Elements
Clamp Units
Clamping Parts
Machine Vises
Drilling Vises
Vibration Isolation
Surface Plates and Measurement Instruments
Index

Section Drawing

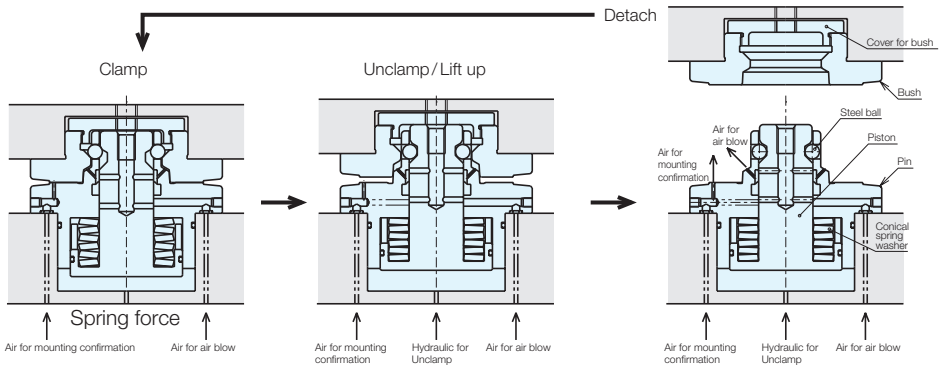

Technical Data

Type		Hydraulic Type Single Action			
Drive Method	Clamping	Spring			
	Unclamp	Hydraulics			
No.		QLSM03	QLSM07	QLSM10	QLSM16
Clamping Force (kN) (at 5 MPa)		3	7	10	16
Cylinder Volume (cm^3)	Clamp Side	-	-	-	-
	Unclamp Side	2	7	14	15
Clamp Stroke (mm)		1.8	2.3	3.1	2.6
Liftup Amount (mm) (at 5 MPa)		1.3	1.8	2.6	2.1
Liftup Force (kN/piece) (at 5 MPa)		1.7	5	9	10
Minimum Operating Pressure When Unclamped (MPa)		3.6			
Guaranteed Withstand Pressure (MPa)		10			
Recommended Air Blow Pressure (MPa)		0.5			
Ambient Operating Temperature (°C)		0 - 65			
Normal Usage Pressure (MPa)		5			

Usage Examples

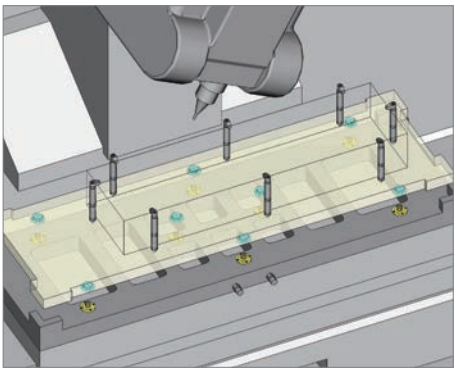

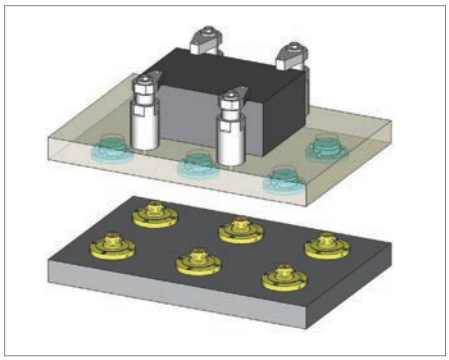

Base Elements
Clamp Units
Clamping Parts
Machine Vises
Drilling Vises
Vibration Isolation
Surface Plates and Measurement Instruments
Index

RoHS Compliant

ERON

No.E-659C

Q-Lock Elements/Pins (Hydraulic Type Double Action)

Material Main body: SCM420 Piston: SCM440
Steel ball: SUJ2

Heat Treatment Main body: HRC55 heat treatment
Piston: HRC55 heat treatment
Steel balls: HRC62 heat treatment

Clamping by hydraulic pressure.

Types and External Dimensions

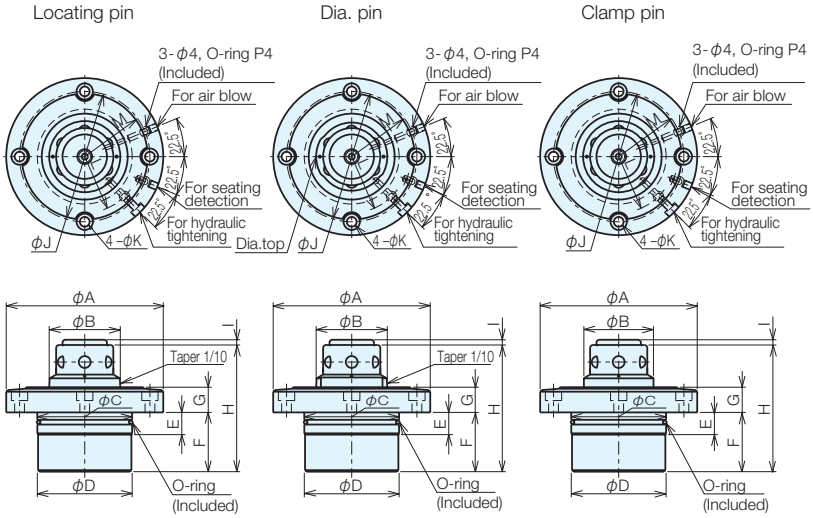

Pin (Hydraulic Type Double Action) Specifications

Type	Order No.	No.	A	B	C h5	D	E	F -0.05 -0.1	G ±0.003	H	I	J	K	L	M	Weight (kg)
Locating pin	71078	QLHM03RP	66	32	42	41	10	25.5	12	65	3	54	5.5	25.5	25.5	0.5
	68845	QLHM07RP	96	40	54	53	12	37	13.5	75	3	82	6.6	34	34	1.5
	68846	QLHM10RP	106	48	64	63	15	40	17	85.5	3.5	88	6.6	38	44	2.3
	68847	QLHM16RP	120	55	80	79	15	45	18	96.5	3.5	100	9	46	50	3.5
	68848	QLHM25RP	140	55	90	89	15	50	18	103.5	3.5	116	11	54	58	4.8
Dia. Pin	71079	QLHM03DP	66	32	42	41	10	25.5	12	65	3	54	5.5	25.5	25.5	0.5
	68849	QLHM07DP	96	40	54	53	12	37	13.5	75	3	82	6.6	34	34	1.5
	68850	QLHM10DP	106	48	64	63	15	40	17	85.5	3.5	88	6.6	38	44	2.3
	68851	QLHM16DP	120	55	80	79	15	45	18	96.5	3.5	100	9	46	50	3.5
	68852	QLHM25DP	140	55	90	89	15	50	18	103.5	3.5	116	11	54	58	4.8
Clamp pin	71081	QLHM03CP	66	30	42	41	10	25.5	12	65	3	54	5.5	25.5	25.5	0.5
	68853	QLHM07CP	96	39	54	53	12	37	13.5	75	3	82	6.6	34	34	1.5
	68854	QLHM10CP	106	47	64	63	15	40	17	85.5	3.5	88	6.6	38	44	2.3
	68855	QLHM16CP	120	54	80	79	15	45	18	96.5	3.5	100	9	46	50	3.5
	68856	QLHM25CP	140	54	90	89	15	50	18	103.5	3.5	116	11	54	58	4.8

Mounting Dimensions

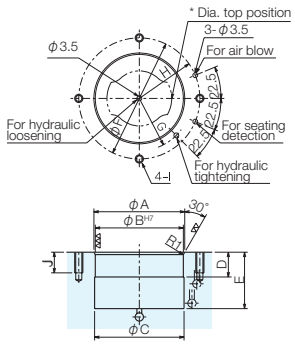

No.	A	B H7	C	D	E	F	G	H	I	J
QLHM03	43	42	41.5	12	31	54	25.5	25.5	M 5	13
QLHM07	56	54	55	18	38	82	34	34	M 6	15
QLHM10	66	64	65	20	41	88	38	44	M 6	15
QLHM16	82	80	81	20	46	100	46	50	M 8	20
QLHM25	92	90	91	20	51	116	54	58	M10	20

* For dia. pins, the position between the top position and tapping hole is as shown in the diagram, and the tapping holes and port holes should be machined to suit the direction of the dia.

Base Elements
Clamp Units
Clamping Parts
Machine Vises
Drilling Vises
Vibration Isolation
Surface Plates and Measurement Instruments
Index

Section Drawing

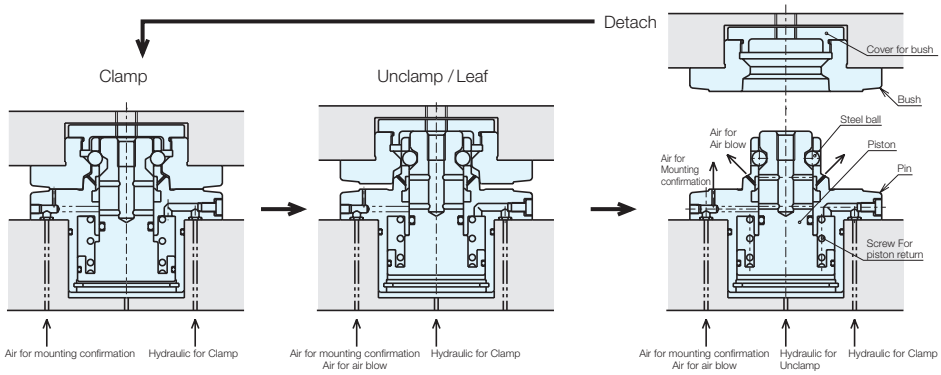

Technical Data

Type		Hydraulic Type Double Action				
Drive Method	Clamping	Hydraulics				
	Unclamp	Hydraulics				
No.		QLHM03	QLHM07	QLHM10	QLHM16	QLHM25
Clamping Force (kN) (at 5 MPa)		3	7	10	16	25
Cylinder Volume (cm³)	Clamp Side	2	3	6	10	13
	Unclamp Side	3	5	7	13	16
Clamp Stroke (mm)		3	3	3.5	3.5	3.5
Liftup Amount (mm) (at 5 MPa)		2.5	2.5	3	3	3
Liftup Force (kN/piece) (at 5 MPa)		4.5	7.5	11	18.5	23
Minimum Operating Pressure When Unclamped (MPa)		2.5				
Guaranteed Withstand Pressure (MPa)		10				
Recommended Air Blow Pressure (MPa)		0.5				
Ambient Operating Temperature (˚C)		0 - 65				
Normal Usage Pressure (MPa)		5				

Usage Examples

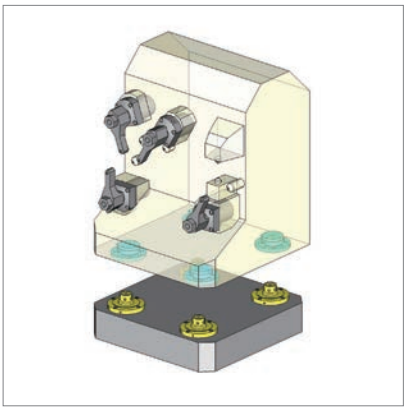

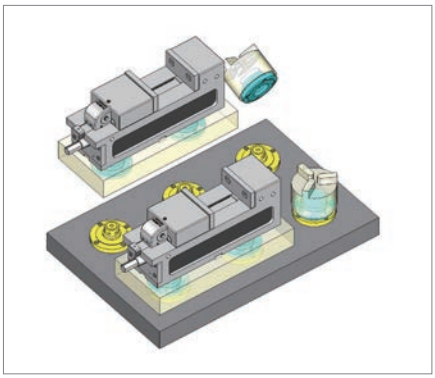

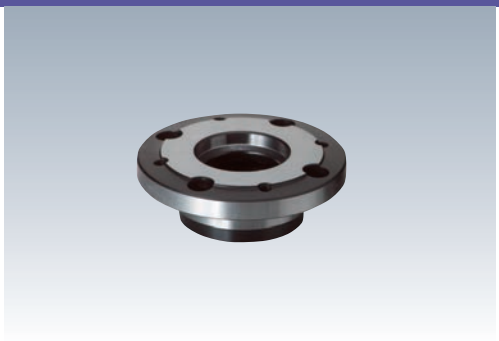

RoHS Compliant

ERON

No.E-659C

Q-Lock Elements/Bushes (Hydraulic Type)

Material Main body: SCM420

Heat Treatment Main body: HRC55 heat treatment

Types and External Dimensions

Locate bush

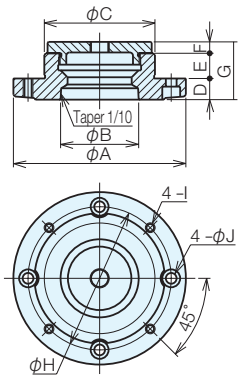

Clamp bush

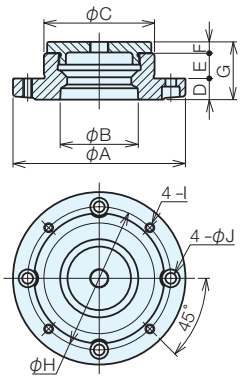

Bush Specifications

Type	Order No.	No.	A	B	C h5	D ±0.003	E	F	G	H	I (Coarse Thread)	J	Weight (kg)
Locate bush	71082	QL03RB	66	32	45	10	13.5	6	29.5	54	M5 × 0.8	5.5	0.4
	68857	QL07RB	90	40	58	11.5	12.5	7	31	72	M6 × 1.0	6.6	0.8
	68858	QL10RB	106	48	68	13	15.5	7	35.5	88	M6 × 1.0	6.6	1.2
	68859	QL16RB	120	55	82	14	19	8	41	100	M8 × 1.25	9	1.8
	68860	QL25RB	130	55	82	16	19	8	43	108	M10 × 1.5	11	2.2
Clamp Bush	71083	QL03CB	66	31.9	45	10	13.5	6	29.5	54	M5 × 0.8	5.5	0.4
	68861	QL07CB	90	39.8	58	11.5	12.5	7	31	72	M6 × 1.0	6.6	0.8
	68865	QL10CB	106	47.8	68	13	15.5	7	35.5	88	M6 × 1.0	6.6	1.2
	68866	QL16CB	120	54.8	82	14	19	8	41	100	M8 × 1.25	9	1.8
	68867	QL25CB	130	54.8	82	16	19	8	43	108	M10 × 1.5	11	2.2

Mounting Dimensions

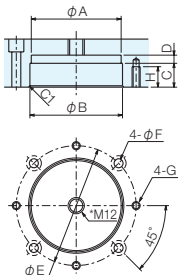

No.	A	B H7	C	D	E	F	G	H
QL03	44.5	45	14	7	54	5.5	M 5	13
QL07	57	58	14.5	6	72	6.6	M 6	15
QL10	67	68	17.5	6	88	6.6	M 6	15
QL16	81	82	21	7	100	9	M 8	15
QL25	81	82	21	7	108	11	M10	20

* For the M12, use a plug as a lid. If you cannot unclamp due to hydraulic trouble, detach by using this hole.

Base Elements
Clamp Units
Clamping Parts
Machine Vises
Drilling Vises
Vibration Isolation
Surface Plates and Measurement Instruments
Index

RoHS Compliant

ERON

No.E-659HC

Height Cylinders for Q-Lock Elements

Material SCM420

Heat Treatment HRC60 heat treatment

Surface Treatment Blackened

- Deformations, machining vibrations, etc. in the jig base can be prevented by installing between each Q-Lock Element Pin.

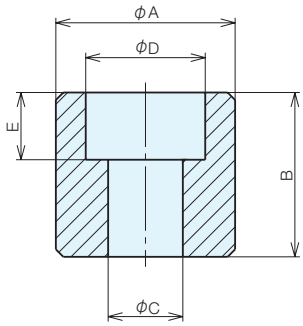

Specifications

Order No.	No.	Compatible Q-Lock Elements	A	B $^{-0.009}_{-0.018}$	C	D	E	Weight (g)
84125	**QL-H0814**	QLT19	24	14	9	15	8.5	30
84126	**QL-H1220**	QLT26	36	20	13	23	14	100
84127	**QL-H1224**	QLT32	36	24	13	23	14	110
84128	**QL-H1630**	QLT40,QL(S/H)M10	56	30	18	26	17	480
84129	**QL-H1222**	QL(S/H)M03	36	22	13	23	14	100
84130	**QL-H1625**	QL(S/H)M07	56	25	18	26	17	400
84131	**QL-H1632**	QL(S/H)M16	75	32	18	26	17	920
84132	**QL-H1634**	QLHM25	75	34	18	26	17	1080

Usage Examples

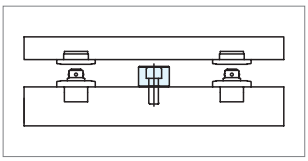

Base Elements
Clamp Units
Clamping Parts
Machine Vises
Drilling Vises
Vibration Isolation
Surface Plates and Measurement Instruments
Index

RoHS Compliant

ERON

No.E-659

2 Faces/MC Tooling Blocks with Q-Lock Elements

	Main body	Q-Lock Element	Height Cylinder	Rough Guide	Bottom Surface Rough Guide	Spacer
Material	FC250	SCM440	SCM420	MC Nylon	MC Nylon	S45C
Heat Treatment	Annealing	Heat treatment (HRC55)	Heat treatment (HRC55)	-	-	-
Surface Treatment	Painting (Cast Surface)	Non-electrolytic Plating	Blackened	-	-	-
Accessories	Eye bolt, Top plate					

- 2-face tooling blocks with Q-Lock Elements.
- Plates can be located and clamped with one touch by combining with compatible bushes.
- The position repeatability accuracy when using E-659P Attachment Plates with Q-Lock Elements is 3 μm .

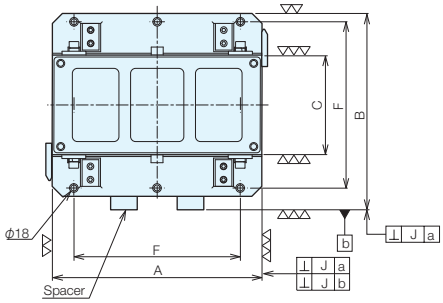

TBQ400TS does not have a spacer.

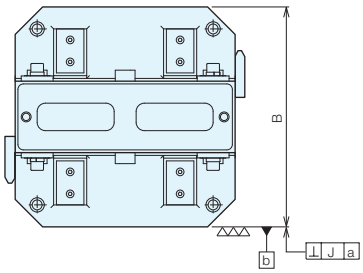

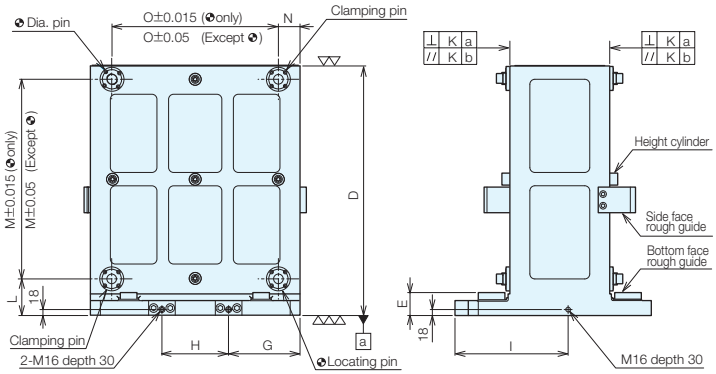

Specifications

Order No.	No.	A	B	C	D	E	F	Mounting Hole Diameter	Number of Mounting Holes	G	H	I
83083	TBQ400TS	400	400	130	550	64	320	ϕ 18	4	145	110	225
68870	TBQ500TS	500	475	200	650	69	400	ϕ 18	4	175	150	275
68871	TBQ630TS	630	590	300	750	69	500	ϕ 18	6	215	200	340

No.	J	K	L	M	N	O	Locating Pin	Dia. Pin	Clamping Pin	Weight (kg)
TBQ400TS	0.01/500	0.02/500	115	400	40	320	QLT26RP	QLT26DP	QLT26CP	126
TBQ500TS	0.01/500	0.02/500	110	500	50	400	QLT26RP	QLT26DP	QLT26CP	195
TBQ630TS	0.01/500	0.02/500	110	600	65	500	QLT32RP	QLT32DP	QLT32CP	315

* Custom-made products to suit your specifications are also available.

Please specify your desired dimensions and weight.

Palette Size	C	D	Weight (kg)

Base Elements
Clamp Units
Clamping Parts
Machine Vises
Drilling Vises
Vibration Isolation
Surface Plates and Measurement Instruments
Index

RoHS Compliant

ERON

No.E-659P

Attachment Plates with Q-Lock Elements

Material Plate: S50C Q-Lock Elements: SCM440
Heat Treatment Q-Lock Elements: Heat treatment (HRC55)
Surface Treatment Q-Lock Elements: Non-electrolytic plating
Accessories Eye bolt

- Attachment plates for 2 Faces/MC Tooling Blocks with Q-Lock Elements.
- Locating holes are fitted with hardened bushes, and finished with a high pitch accuracy of ±0.015.
- Should be used with holes and grooves machined by the user to match the workpiece as an attachment plate for the tooling blocks.

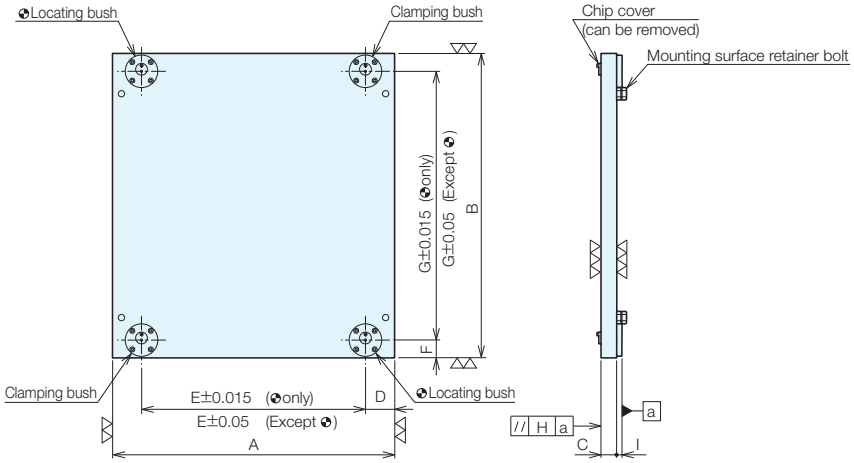

Specifications

Order No.	No.	A	B	C	D	E	F	G	H	I	Locating Bush	Clamping Bush	Weight (kg)
83084	**TBQ400TS-PL**	400	485	30	40	320	50	400	0.02	10	QLT26RB	QLT26CB	46
68874	**TBQ500TS-PL**	500	580	30	50	400	40	500	0.02	10	QLT26RB	QLT26CB	67
68875	**TBQ630TS-PL**	630	680	35	65	500	40	600	0.02	12	QLT32RB	QLT32CB	100

* Custom-made products to suit your specifications are also available.

Usage Examples

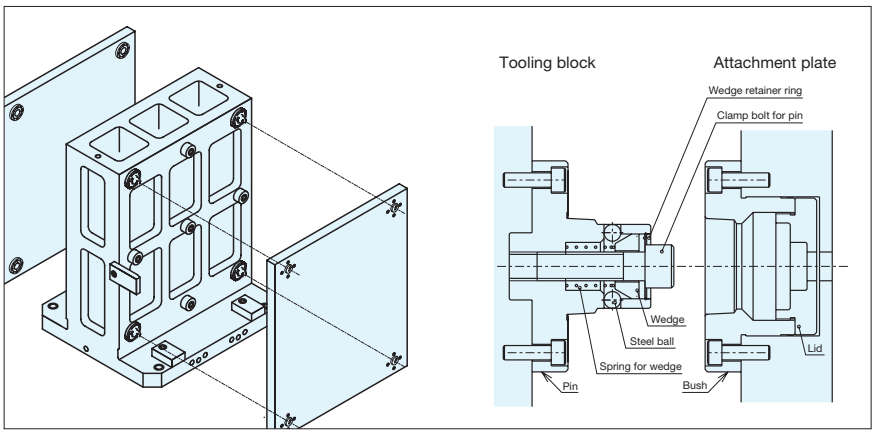

Base Elements
Clamp Units
Clamping Parts
Machine Vises
Drilling Vises
Vibration Isolation
Surface Plates and Measurement Instruments
Index

RoHS Compliant

ERON®

No.E-659

4 Faces/MC Tooling Blocks with Q-Lock Elements

	Main body	Q-Lock Elements	Height Cylinder	Rough Guide	Bottom Surface Rough Guide
Material	FC250	SCM440	SCM420	MC Nylon	MC Nylon
Heat Treatment	Annealing	Heat treatment (HRC55)	Heat treatment (HRC55)	-	-
Surface Treatment	Painting (Cast Surface)	Non-electrolytic Plating	Blackened	-	-
Accessories	Eye bolt, Top plate				

- 4-face tooling blocks with Q-Lock Elements.
- Plates can be located and clamped with one touch by combining with compatible bushes.
- The position repeatability accuracy when using E-659 P Attachment Plates with Q-Lock Elements is 3 μm .

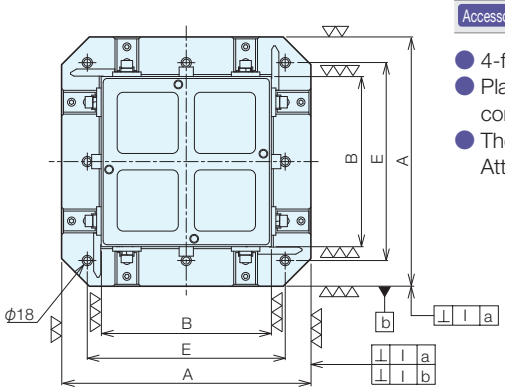

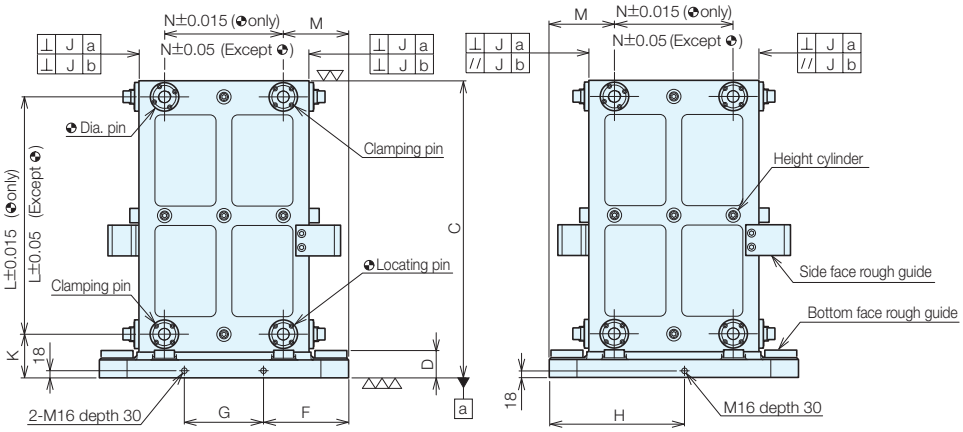

Specifications

Order No.	No.	A	B	C	D	E	Mounting Hole Diameter	Number of Mounting Holes	F	G	H	I
83081	**TBQ400T**	400	200	550	64	320	ϕ 18	4	145	110	225	0.01/500
68868	**TBQ500T**	500	300	650	69	400	ϕ 18	4	175	150	275	0.01/500
68869	**TBQ630T**	630	430	750	69	500	ϕ 18	8	215	200	340	0.01/500

No.	J	K	L	M	N	Locating Pin	Dia. Pin	Clamping Pin	Weight (kg)
TBQ400T	0.02/500	115	400	135	130	QLT26RP	QLT26DP	QLT26CP	140
TBQ500T	0.02/500	110	500	150	200	QLT26RP	QLT26DP	QLT26CP	210
TBQ630T	0.02/500	110	600	165	300	QLT32RP	QLT32DP	QLT32CP	340

* Custom-made products to suit your specifications are also available.

Please specify your desired dimensions and weight.

Palette Size	B	C	Weight (kg)

Base Elements
Clamp Units
Clamping Parts
Machine Vises
Drilling Vises
Vibration Isolation
Surface Plates and Measurement Instruments
Index

RoHS Compliant

ERON

No.E-659P

Attachment Plates with Q-Lock Elements

Material Plate: S50C Q-Lock Elements: SCM440
Heat Treatment Q-Lock Elements: Heat treatment (HRC55)
Surface Treatment Q-Lock Elements: Non-electrolytic plating
Accessories Eye bolt

- Attachment plates for 4 Faces/MC Tooling Blocks with Q-Lock Elements.
- Locating holes are fitted with hardened bushes, and finished with a high pitch accuracy of ±0.015.
- Should be used with holes and grooves machined by the user to match the workpiece as an attachment plate for the tooling blocks.

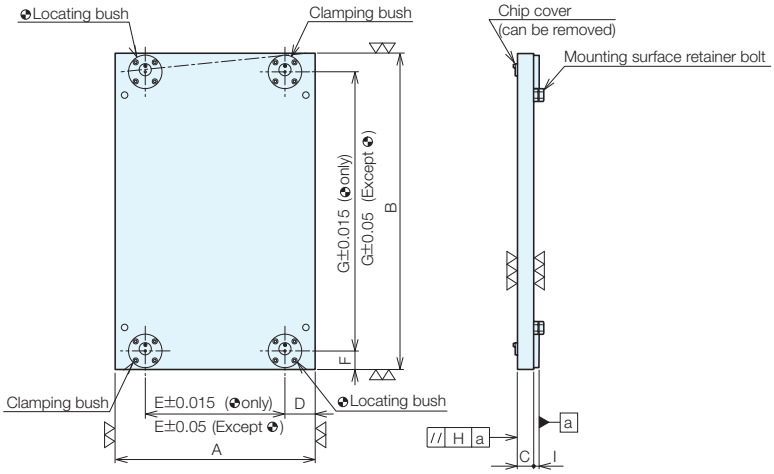

Specifications

Order No.	No.	A	B	C	D	E	F	G	H	I	Locating Bush	Clamping Bush	Weight (kg)
83082	**TBQ400T-PL**	200	485	30	35	130	50	400	0.02	10	QLT26RB	QLT26CB	25
68872	**TBQ500T-PL**	300	580	30	50	200	40	500	0.02	10	QLT26RB	QLT26CB	40
68873	**TBQ630T-PL**	430	680	35	65	300	40	600	0.02	12	QLT32RB	QLT32CB	68

* Custom-made products to suit your specifications are also available.

Usage Examples

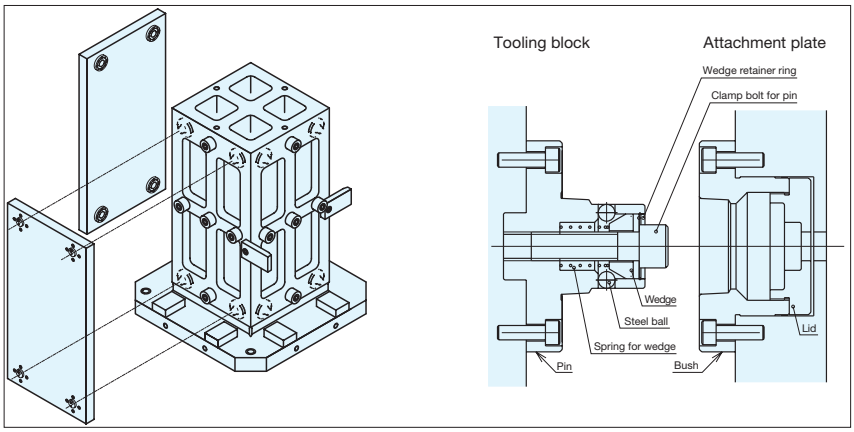

Base Elements
Clamp Units
Clamping Parts
Machine Vises
Drilling Vises
Vibration Isolation
Surface Plates and Measurement Instruments
Index

Base Elements

Features

Material

FC300 to 250 which are also suitable for jigs are used for attenuation and strength performance as analyzed by FFT vibration analyzer of vibration during machining.

Heat Treatment

Residual stress is released and deformation is prevented by using a natural gas annealing oven that offers complete temperature control for the best thermal efficiency.
Aging variations and temperature variations are minimized by complete annealing.

Complete annealing by natural gas annealing oven

Structure

Has a unique structure that keeps deformation and resonance due to load, vibration, and temperature to a minimum through vibration and rigidity analysis using accumulated data and the finite element analysis method (FEM).

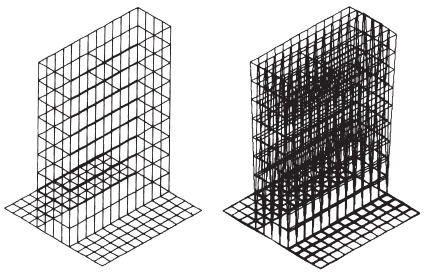

Analysis by the finite element analysis method

Accuracy

The right angle part of the face that touches the edge locator of the horizontal machining center is finished to a high accuracy of within 0.01 by grinding or hand scraping.
(MC Tooling Blocks, MC Pallet Sub Tables)

Base Elements
Clamp Units
Clamping Parts
Machine Vises
Drilling Vises
Vibration Isolation
Surface Plates and Measurement Instruments
Index

Main Selection Factors for Base Elements

1. Machine specifications

Spindle direction: The type of base element varies depending on the main spindle direction.

●Horizontal type

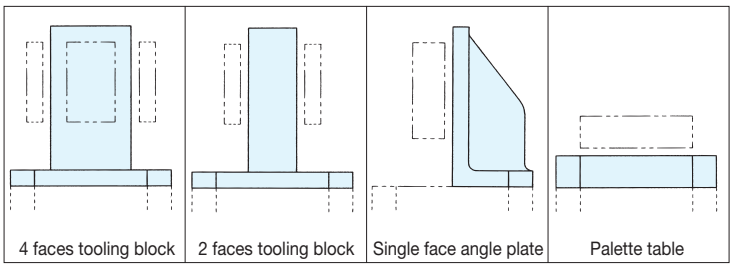

●Vertical type

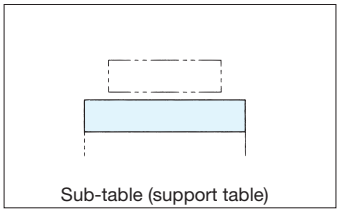

Table size:

- You generally select the base element that is the same size as the machine table.
- For horizontal machining centers, the table specifications are set by the JIS standard. (Refer to P.746 of JIS B 6337). The base elements are designed with mounting holes and locating based on this JIS standard.
- For vertical machines, consideration needs to be given to attachment method, oil channels, etc.

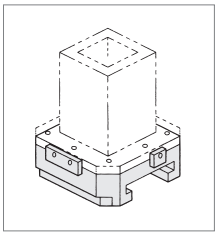

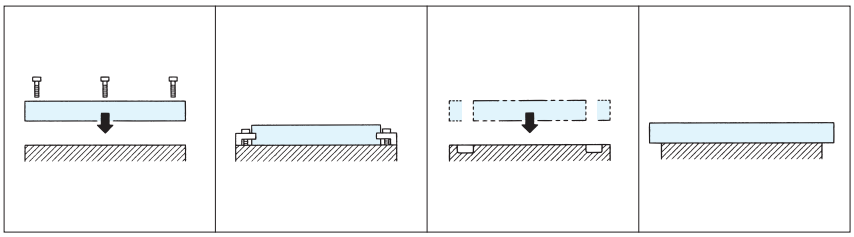

Set the mounting holes to match the machine table.

If you are using an attachment clamp, space is needed for clamping.

Selection of a size that takes the oil channel into account is required.

Another method is to create overhang to account for interference, load weight, and other factors. This is an enlargement of the working area.

Base Elements
Clamp Units
Clamping Parts
Machine Vises
Drilling Vises
Vibration Isolation
Surface Plates and Measurement Instruments
Index

Base Elements

Load weight: Base elements and jigs need to be installed on the machine table within the load weight limit.

Load weight = Base element + Clamping and locating jig + Workpiece

Other: In horizontal machining centers, in particular, interference with the splash guard may occur depending on the height of the base elements.

Furthermore, the interference area such as due to rotation is also defined.

Selection needs to take into account the combination of base elements, workpieces, and jigs.

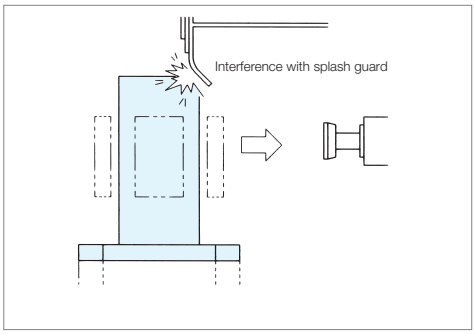

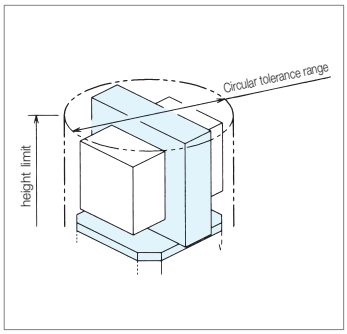

Base Elements
Clamp Units
Clamping Parts
Machine Vises
Drilling Vises
Vibration Isolation
Surface Plates and Measurement Instruments
Index

2. Production methods and workpieces

Selection of the base element varies depending on the following conditions.
(Horizontal machining center in particular)

- Workpiece size
- Workpiece type
- Number of processes
- Number of products and other factors

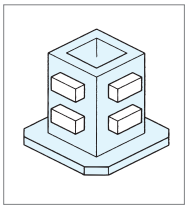

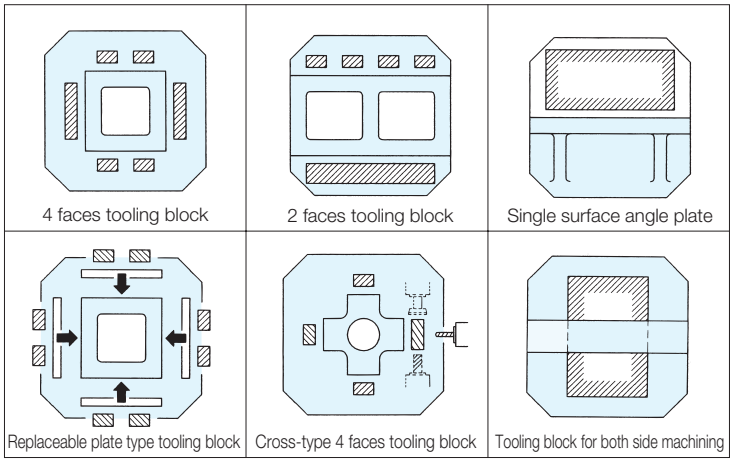

Self-cutting

Virtually all multi-face tooling blocks have self-cut allowance dimension.
Self-cut offers a finish with accuracy that matches the machine you are using.

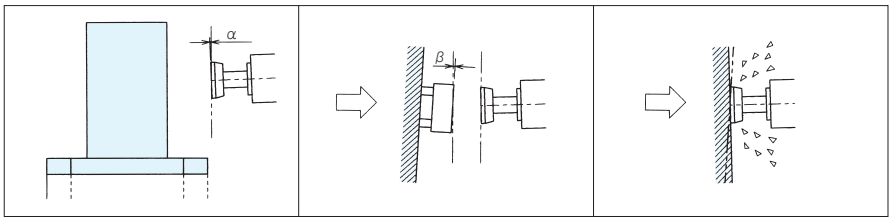

For every machine, the error is not strictly zero. The machine you are using similarly has an error within some permitted range.

If the error in the machine you are using, the error in the base element, and the error in the locating or other jig fixture, a large error may occur.

By cutting by yourself, you can obtain precision that matches the device.

Base Elements
Clamp Units
Clamping Parts
Machine Vises
Drilling Vises
Vibration Isolation
Surface Plates and Measurement Instruments
Index

MEMO

Base Elements
Clamp Units
Clamping Parts
Machine Vises
Drilling Vises
Vibration Isolation
Surface Plates and Measurement Instruments
Index

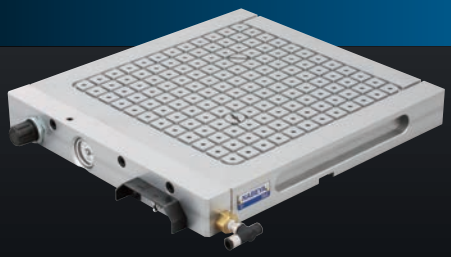

Clamp Units

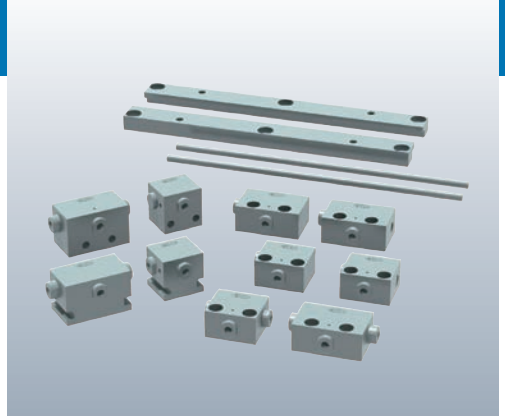

RoHS Compliant

ERON®

No.E-1102

Multi Auto Clamps

- Clamps multiple workpieces at the same time with one action.
- Clamping force direction can be rotated through 90 degrees.
- Jig design offers great flexibility.
- Equipped with a return function that supports automation.
- Comes in a wide range of variations.

Maximum Clamp up to 10 workpieces at the same time with one action.

The Multi Auto Clamp allows you to clamp multiple workpieces all at the same time by tightening at just a single location.
Layouts in a wide variety of patterns can be accommodated through combinations of standard elements.

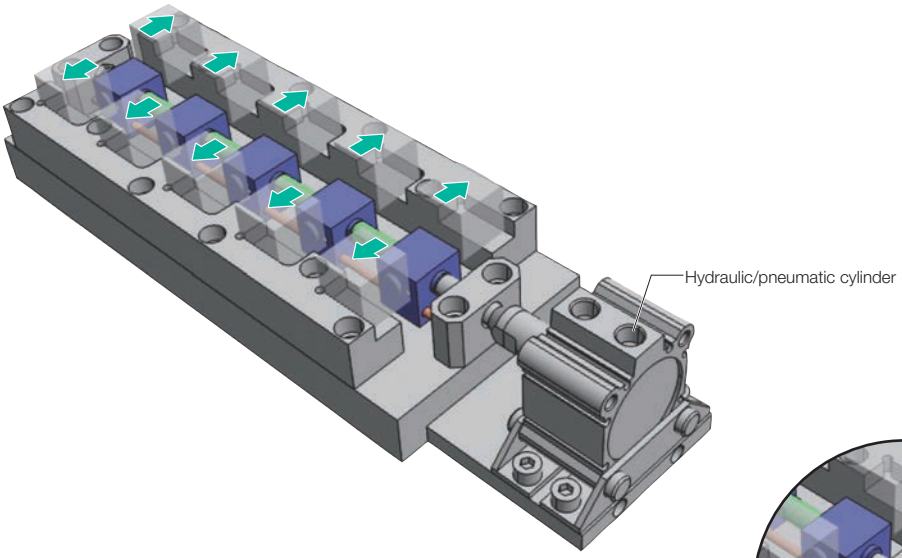

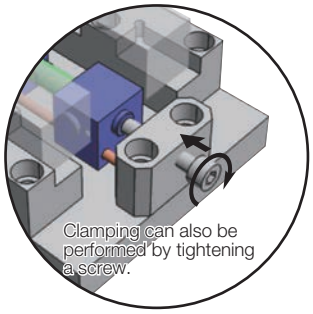

■ Examples of Combinations

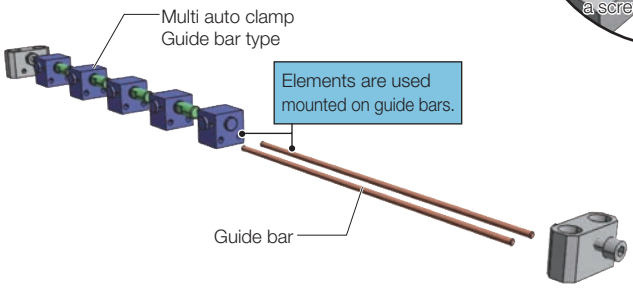

Base Elements
Clamp Units
Clamping Parts
Machine Vises
Drilling Vises
Vibration Isolation
Surface Plates and Measurement Instruments
Index

Clamping Force of Multi Auto Clamps

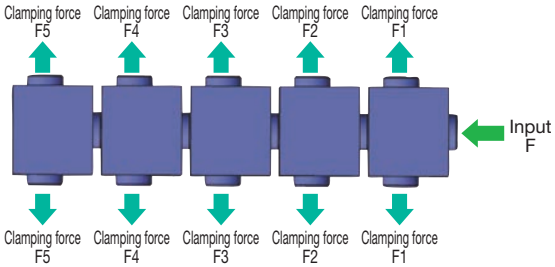

* Use a maximum input F of 5 kN.
* When used joined, use up to a maximum of 5 units.
* The individual clamping forces when joined are as follows relative to input F.
  - F1=(F/2) × 0.9
  - F2=F1 × 0.9
  - F3=F2 × 0.9
  - F4=F3 × 0.9
  - F5=F4 × 0.9

Vertically and Horizontally Clamp From 2 Directions with Variable Force Direction at the same time with one action.

Allows you to simultaneously clamp vertically and horizontally with a single clamping force input, making it ideal for plate machining.
Furthermore, the clamp point can be lowered by using a guide plate.

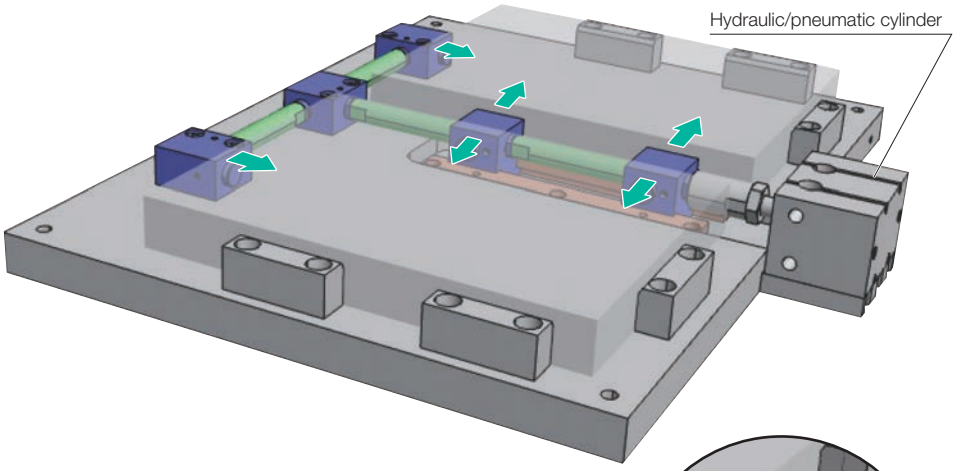

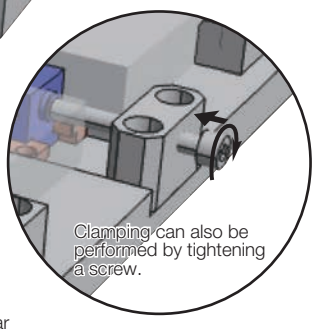

Examples of Combinations

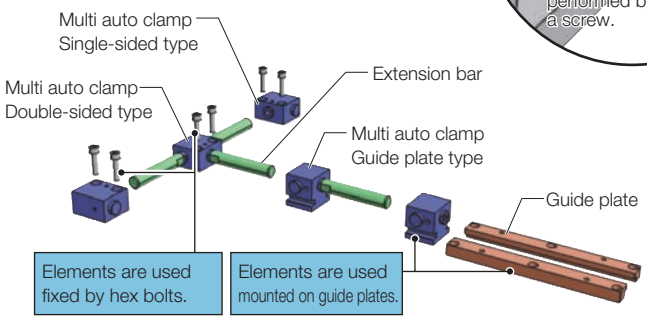

Flexibly Handles Changing Workpieces. Offers a High Flexibility of Jig Design.

Greatly reduces the work of changing Jig layout when changing workpieces, contributing to reduced production costs and shorter manufacturing times.

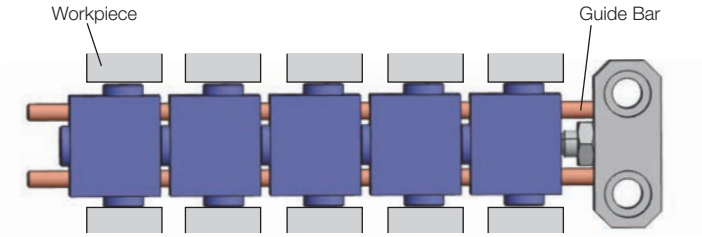

■ Can be easily detached from and attached to the guide bar (guide plate)

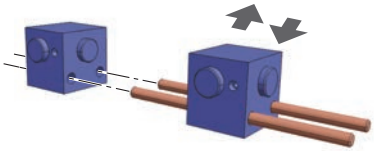

Easy to change to suit the workpiece

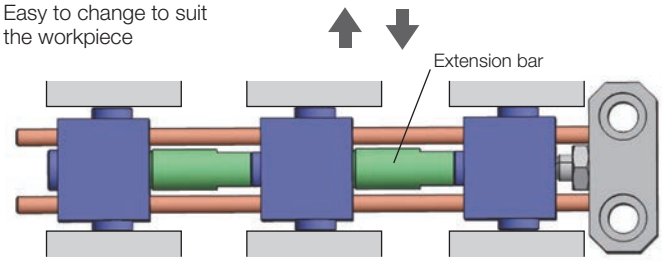

Increasing or decreasing number of workpieces can be easily handled simply by attaching or detaching Multi Auto Clamps to or from the guide bar (guide plate).
Adjustments to workpiece sizes can be handled by employing an extension bar.

Employs a return mechanism that also supports automation.

The clamp automatically releases when the clamping force is off.
Supports automation by robot control.

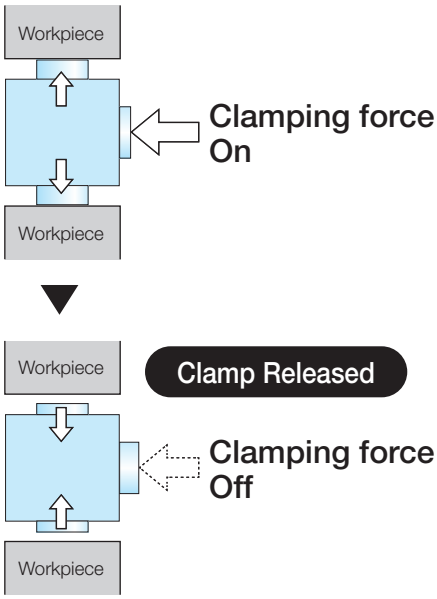

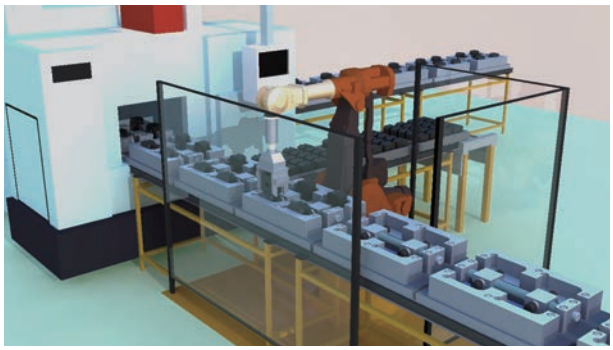

Base Elements
Clamp Units
Clamping Parts
Machine Vises
Drilling Vises
Vibration Isolation
Surface Plates and Measurement Instruments
Index

Wide Range of Variations

Series Type
Transmits the input clamping force in a straight line.

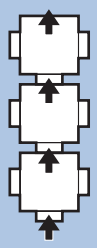

Guide Bar Type
The easy-to-use guide bar type can be used for light cutting.

Standard Type

Type with Return Mechanism

Guide Plate Type
The guide plate type can be used when you want to lower the clamping position.

Standard Type

Type with Return Mechanism

Branch Type
Transmits the input clamping force rotated through 90 degrees

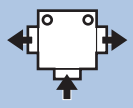
Double-sided

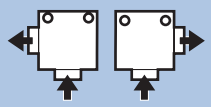
Single-sided

Double-sided Type
Transmits the input clamping force to both sides.

Standard Type

Type with Return Mechanism

Single-sided Type
Transmits the input clamping force to one side.

Standard Type

Type with Return Mechanism

Tapping on Clamp Pins
You can choose whether to have tapping on the output side clamp pins for all standard types.

Standard Type
- Input side: Yes/Output side: Yes

- Input side: Yes/Output side: No

* The above are examples of the guide bar type.

Type with Return Mechanism
- Input side: Yes/Output side: Yes

* The above are examples of the guide bar type.

We can design and deliver the optimal jigs. Order-made

If you provide us with settings such as the workpiece size, spacing between workpieces, input method (hand-tightened/air), and input values, we can design the best jig to suit your needs.

Examples of Jigs

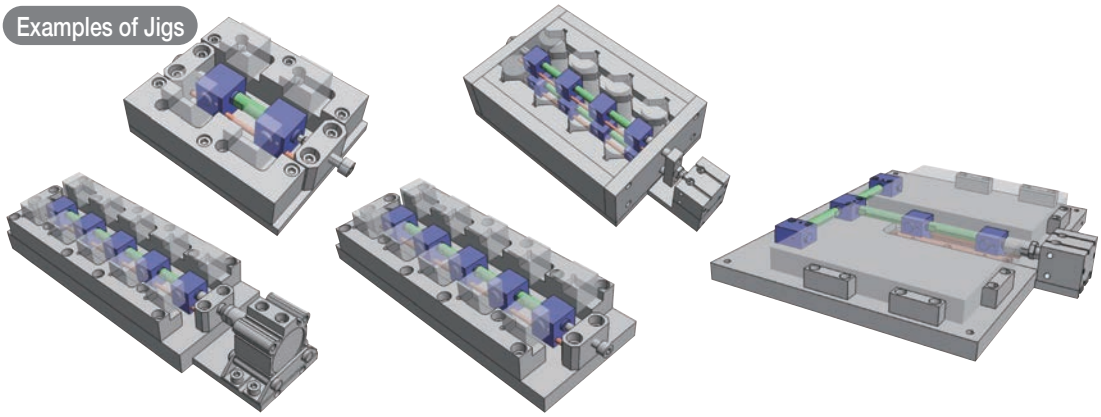

RoHS Compliant

No.E-1102

Multi Auto Clamps - Guide Bar Type [Series Type]

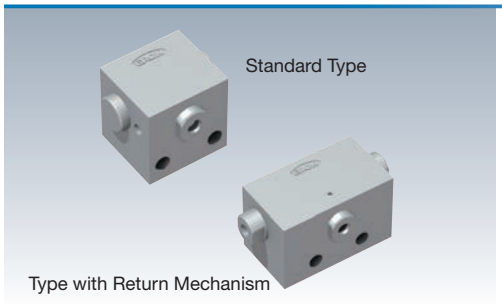

Part name	Material	Heat Treatment	Surface Treatment
Clamp Block	S50C	HRC50 heat treatment	-
Clamp pin	SKD11	HRC60 heat treatment	-

Component Parts

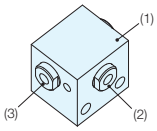

	Component Parts	Quantity
(1)	Clamp Block	1
(2)	Clamp pin (input)	1
(3)	Clamp pin (output)	1

External Dimensions

Standard Type

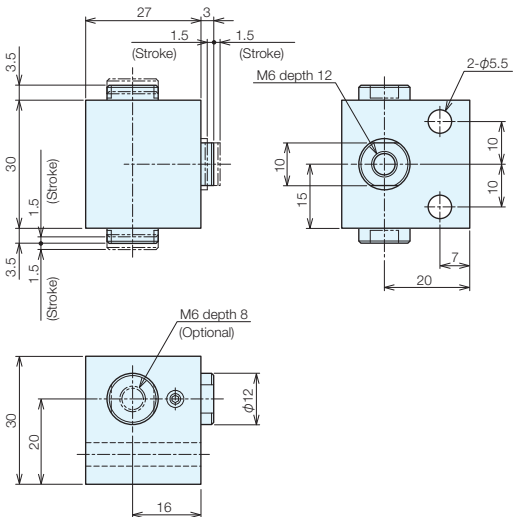

Type with Return Mechanism

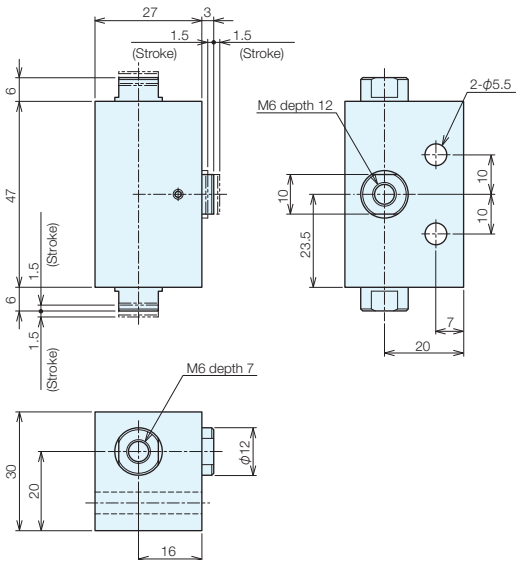

Specifications

Type	Shape	Order No.	No.	Name	Tapped Hole Input Side	Tapped Hole Output Side	Weight (kg)	
Standard		**109780**	**MT121A**	Guide Bar Type	Yes	Yes	0.19	
		114533	**MT122A**	Guide Bar Type	Yes	No	0.20	
Type with Return Mechanism		**114460**	**MR121A**	Main Body (Hole Type)	Yes	Yes	0.31	

Optional

Guide Bar MT12-AG

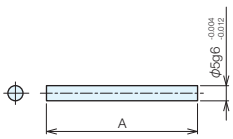

Extension Bar MT12-S

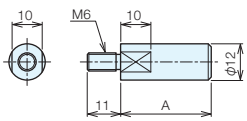

* For guide bars and extension bars, provide us with the A dimension and we will give you a separate quote.

Base Elements
Clamp Units
Clamping Parts
Machine Vises
Drilling Vises
Vibration Isolation
Surface Plates and Measurement Instruments
Index

RoHS Compliant

No.E-1102

Multi Auto Clamps - Guide Plate Type [Series Type]

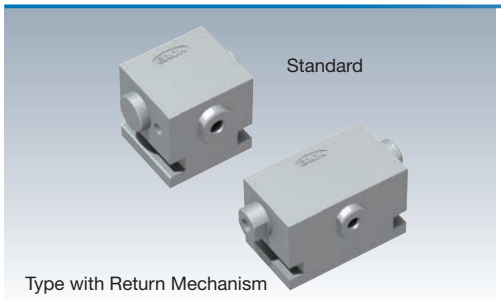

Part name	Material	Heat Treatment	Surface Treatment
Clamp Block	S50C	HRC50 heat treatment	-
Clamp pin	SKD11	HRC60 heat treatment	-

Component Parts

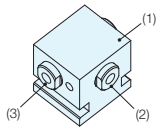

	Component Parts	Quantity
(1)	Clamp Block	1
(2)	Clamp pin (input)	1
(3)	Clamp pin (output)	1

External Dimensions

Standard Type

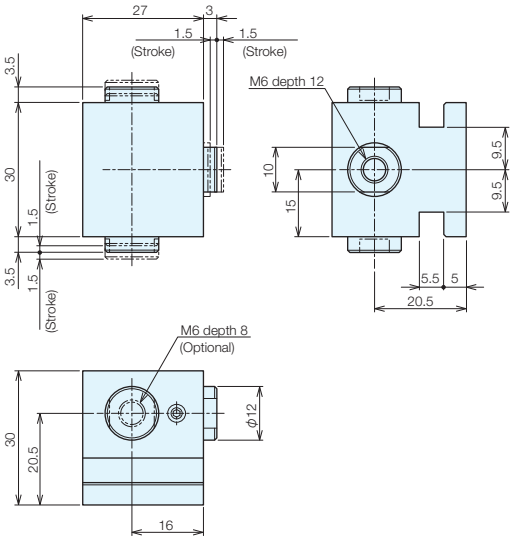

Type with Return Mechanism

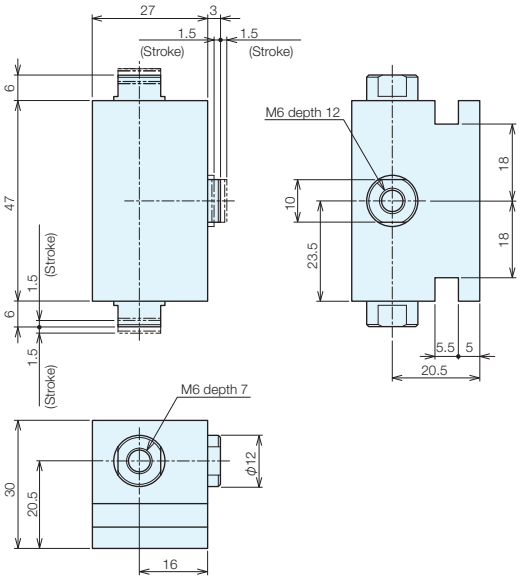

Specifications

Type	Shape	Order No.	No.	Name	Tapped Hole		Weight (kg)	
					Input Side	Output Side		
Standard		**109781**	**MT121B**	Guide Plate Type	Yes	Yes	0.18	
		114536	**MT122B**	Guide Plate Type	Yes	No	0.17	
Type with Return Mechanism		**114462**	**MR121B**	Main Body (Groove Type)	Yes	Yes	0.30	

Optional

Guide Plate MT12-BG

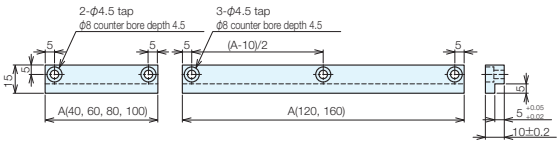

Guide Plate Mounting Dimensions

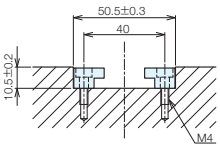

Extension Bar MT12-S

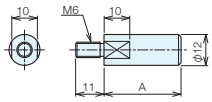

* For guide plates and extension bars, provide us with the A dimension and we will give you a separate quote.

RoHS Compliant

No.E-1102

Multi Auto Clamps - Double-sided Type [Branch Type]

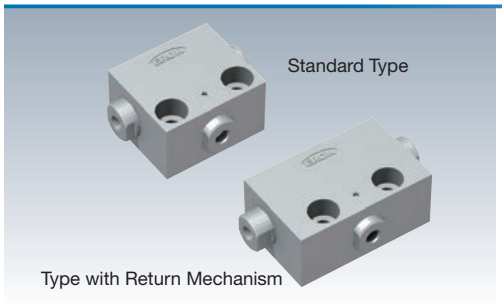

Part name	Material	Heat Treatment	Surface Treatment
Clamp Block	S50C	HRC50 heat treatment	-
Clamp pin	SKD11	HRC60 heat treatment	-

Component Parts

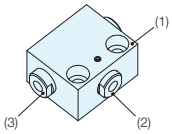

	Component Parts	Quantity
(1)	Clamp Block	1
(2)	Clamp pin (input)	1
(3)	Clamp pin (output)	1

External Dimensions

Standard Type

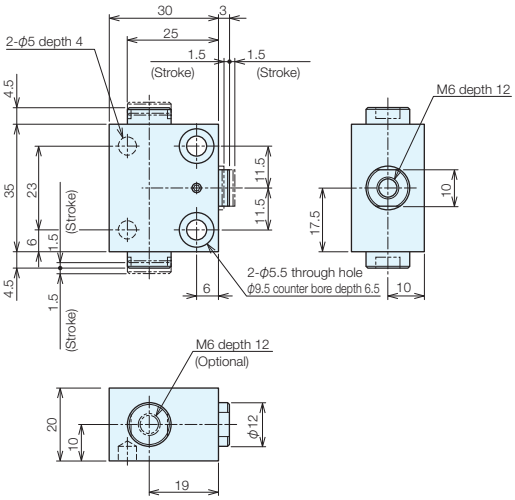

Type with Return Mechanism

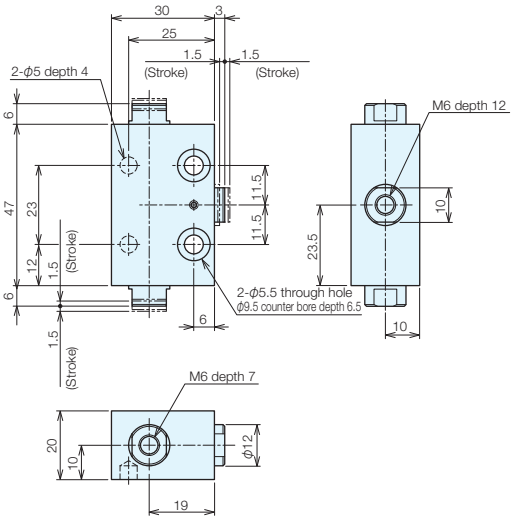

Specifications

Type	Shape	Order No.	No.	Name	Tapped Hole		Weight (kg)	
					Input Side	Output Side		
Standard		**109782**	**MT122**	Branch 2-side push	Yes	Yes	0.16	
		114539	**MT123**	Branch 2-side push	Yes	No	0.17	
Type with Return Mechanism		**114464**	**MR122**	Branch 2-side push	Yes	Yes	0.23	

Optional

Extension Bar MT12-S

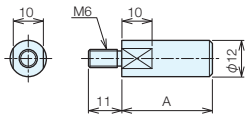

* For extension bars, provide us with the A dimension and we will give you a separate quote.

RoHS Compliant

No.E-1102

Multi Auto Clamps - Single-sided Type [Branch Type]

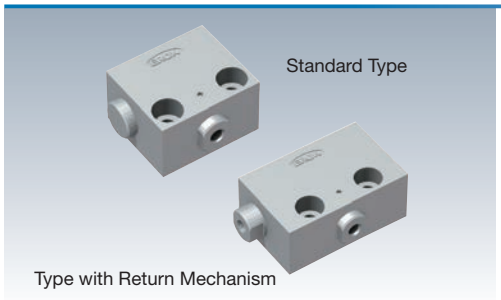

Part name	Material	Heat Treatment	Surface Treatment
Clamp Block	S50C	HRC50 heat treatment	-
Clamp pin	SKD11	HRC60 heat treatment	-

Component Parts

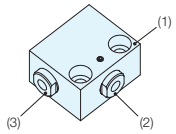

	Component Parts	Quantity
(1)	Clamp Block	1
(2)	Clamp pin (input)	1
(3)	Clamp pin (output)	1

External Dimensions

Standard Type

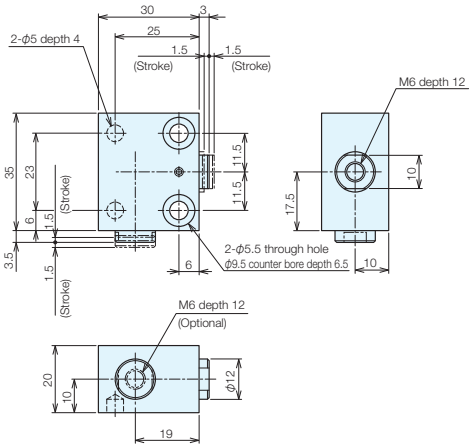

Type with Return Mechanism

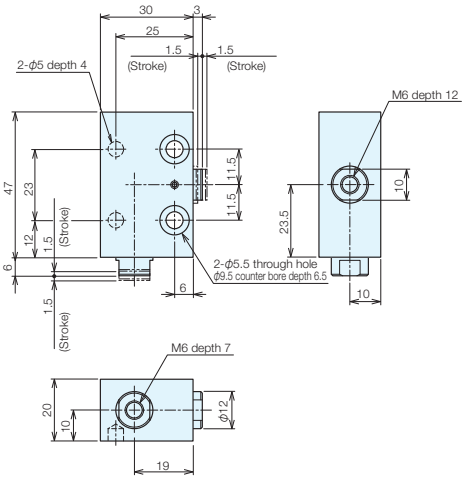

Specifications

Type	Shape	Order No.	No.	Name	Tapped Hole Input Side	Tapped Hole Output Side	Weight (kg)	
Standard		**109783**	**MT123R**	Branch 1-side push	Yes	Yes	0.15	
		114543	**MT123R3**	Branch 1-side push	Yes	No	0.16	
		109921	**MT123L**	Branch 1-side push	Yes	Yes	0.15	
		114544	**MT123L3**	Branch 1-side push	Yes	No	0.16	
Type with Return Mechanism		**114467**	**MR123R**	Branch 1-side push	Yes	Yes	0.22	
		114468	**MR123L**	Branch 1-side push	Yes	Yes	0.22	

Optional

Extension Bar MT12-S

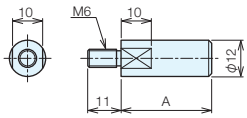

* For extension bars, provide us with the A dimension and we will give you a separate quote.

RoHS Compliant

ERON

No.E-918

Low Wedge Clamps

Part name	Material	Heat Treatment	Surface Treatment
Main body (metal part)	C3604BD	-	-
Main body (rubber part)	NBR	-	-
Clamping bolt	SCM435	HRC25 heat treatment	Blackened
Washers*	SCM435	HRC43 heat treatment	-

* Double-sided type only

Accessories Knock pin ϕ 3h7x6 ... 1 piece

Single-sided type/Double-sided type

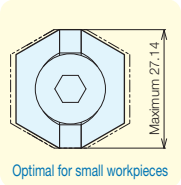

Optimal for small workpieces

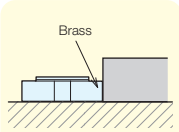

Brass material is used as a measure to prevent scratching the workpiece

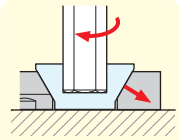

Workpiece floating is extremely small

Single-sided type only

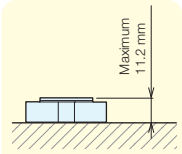

Optimal for thin workpieces

Double-sided type only

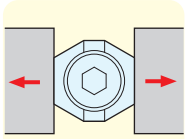

Able to clamp both sides at the same time

Specifications

Single-sided type

Order No.	No.	Screw Thread (Coarse Thread)	Maximum Clamp Height	Clamp Stroke	Maximum Torque N・m	Maximum Clamping Force kN	Weight kg		
76031	LWC-04	M4 × 0.7	3.9	0.4	1.6	0.9	1.4		
76032	LWC-06	M6 × 1.0	5.5	0.7	5.0	1.9	8.4		
76033	LWC-08	M8 × 1.25	6.0	1.0	13.0	4.3	16.0		
76034	LWC-12	M12 × 1.75	11.2	1.2	40.0	7.1	48.0		

Double-sided type

Order No.	No.	Screw Thread (Coarse Thread)	Maximum Clamp Height	Clamp Stroke	Maximum Torque N・m	Maximum Clamping Force kN	Weight kg		
76035	LWCD-04	M4 × 0.7	6.7	0.4	1.6	0.9	1.3		
76036	LWCD-06	M6 × 1.0	10.6	0.7	5.0	1.9	8.4		
76037	LWCD-08	M8 × 1.25	13.1	1.0	13.0	4.3	16.0		
76038	LWCD-12	M12 × 1.75	22.0	1.2	40.0	7.1	46.0		

* The clamp stroke and maximum clamping force are the values for one side.

External Dimensions

Single-sided type

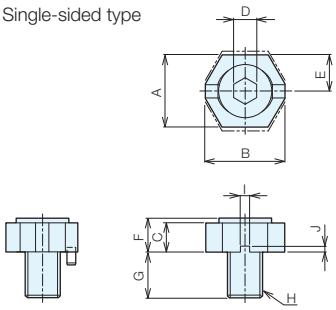

Double-sided type

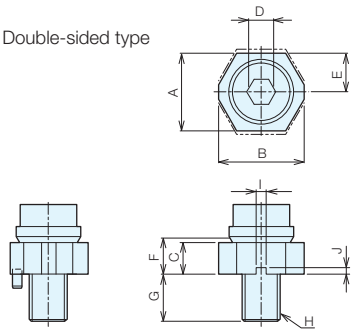

Single-sided type

No.	A	B	C	D	E	F (Max)	G	H (Coarse Thread)	I	J
LWC-04	9.2	10.2	3	2.5	4.6 - 5.0	3.9	6	M4 × 0.7	-	-
LWC-06	15.6	17.3	5	4	7.8 - 8.5	5.5	10	M6 × 1.0	3.2	2
LWC-08	20	21.94	5	5	10.0 - 11.0	6	13	M8 × 1.25	3.2	2
LWC-12	24.6	27.14	10	8	12.3 - 13.5	11.2	18	M12 × 1.75	3.2	2

Double-sided type

No.	A	B	C	D	E	F (Max)	G	H (Coarse Thread)	I	J
LWCD-04	9.2 - 10	10.2	3	2	4.6 - 5.0	6.7	7	M4 × 0.7	-	-
LWCD-06	15.6 - 17	17.3	5	3	7.8 - 8.5	10.6	11	M6 × 1.0	3.2	2
LWCD-08	20 - 22	21.94	5	4	10.0 - 11.0	13.1	14	M8 × 1.25	3.2	2
LWCD-12	24.6 - 27	27.14	10	6	12.3 - 13.5	22	17	M12 × 1.75	3.2	2

Base Elements
Clamp Units
Clamping Parts
Machine Vises
Drilling Vises
Vibration Isolation
Surface Plates and Measurement Instruments
Index

Usage Methods

Cautions

In this product, NBR (synthetic rubber) and adhesive are used in the main body

Do not use solvents such as paint thinner, chlorine-based cutting fluids, or strongly alkaline cutting fluids as these can cause the rubber in the main body to damage.

Do not open wider than the specified opening. Doing so may cause the rubber to break.

The rubber part of the main body is extended by tightening the clamping bolt using an allen key and clamps the workpiece on the metal part.

When unclamped, it returns to its original dimensions due to the compression of the rubber.

Single-sided type

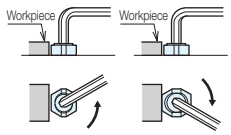

Double-sided type

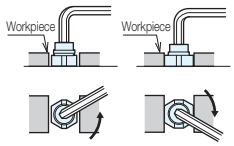

Set the position where the workpiece is clamped by referring to the mounting dimensions taking into account variations in workpiece dimensions.

The locating for clamping direction can be set using the included locating pin.

You can also clamp the workpiece vertically.

(LWC-04 cannot)

Single-sided type

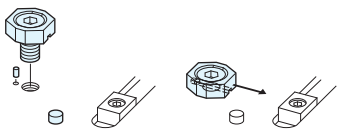

Double-sided type

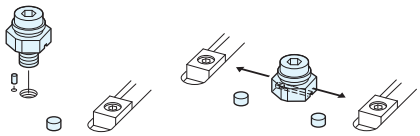

Component Parts

Single-sided type

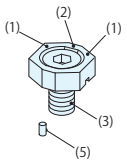

Double-sided type

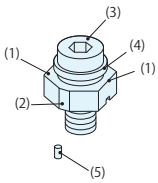

	Component Parts
(1)	Main body (metal part)
(2)	Main body (rubber part)
(3)	Clamping bolt

	Component Parts
(4)	Washers
(5)	Knock pin ϕ3

Mounting Dimensions

Single-sided type

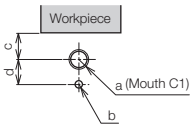

Double-sided type

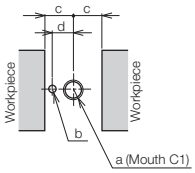

Single-sided type

No.	a (Coarse Thread)	b	c	d
LWC-04	M4 × 0.7	-	4.7 - 4.9	-
LWC-06	M6 × 1.0	ϕ 3H7 depth 4.5 ± 0.2	7.9 - 8.2	6
LWC-08	M8 × 1.25	ϕ 3H7 depth 4.5 ± 0.2	10.1 - 10.7	8
LWC-12	M12 × 1.75	ϕ 3H7 depth 4.5 ± 0.2	12.4 - 13.2	10

Double-sided type

No.	a (Coarse Thread)	b	c	d	Maximum Difference Between Left and Right
LWCD-04	M4 × 0.7	-	4.7 - 4.9	-	0.2
LWCD-06	M6 × 1.0	ϕ 3H7 depth 4.5 ± 0.2	7.9 - 8.2	6	0.3
LWCD-08	M8 × 1.25	ϕ 3H7 depth 4.5 ± 0.2	10.1 - 10.7	8	0.6
LWCD-12	M12 × 1.75	ϕ 3H7 depth 4.5 ± 0.2	12.4 - 13.2	10	0.8

Usage Examples

Single-sided type

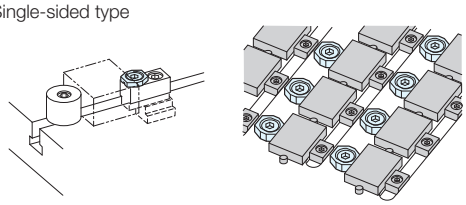

Double-sided type

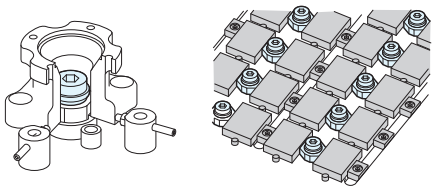

RoHS Compliant

ERON®

No.E-231

Pull Down Free Jaw Vises

- Can be used when a bigger opening that cannot be obtained using an ordinary machine vise is needed.
- Any size of workpiece can be clamped to match the table, including planar, shaper, miller, and boring machine.
- Since the workpiece is clamped by pulling down, floating up is prevented in spite of the powerful clamping force.
- The main body uses Nabeya special ductile cast iron, and does not break.
- The keys are the high accuracy and ground finish.

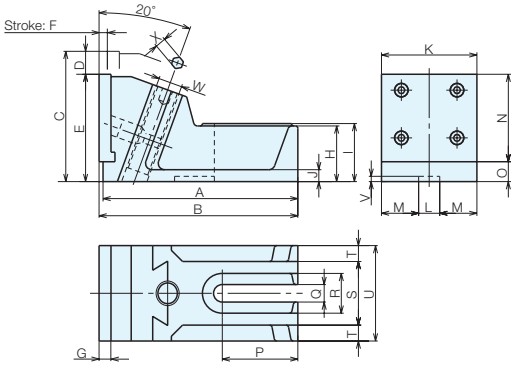

Standard Accessories PV-1

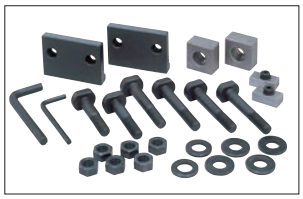

Standard Accessories PV-2 and PV-3

Accessories

	Standard Guide Block (2 pieces per set)	Serrated Jaw plate	T-slot Bolt	Hex Nut	Washer	Fixed Block	Hex Bolt	Large Angle Wrench (For Clamping and for Jaw Plates)
PV-0	-	2 pieces	-	-	M12: 2 pieces	-	M12×45 2 pieces	1 pieces of each
PV-1	-	2 pieces	M14: Compatible T-slot 14.18 4 pieces	M14: 4 pieces	M14: 4 pieces	-	-	1 pieces of each
PV-2	Compatible groove width 18 mm 1 set	2 pieces	M14: Compatible T-slot 14.18 6 pieces	M14: 6 pieces	M14: 6 pieces	2 pieces	-	1 pieces of each
PV-3	Compatible groove width 18 mm 1 set	2 pieces	M18: Compatible T-slot 18.22 6 pieces	M18: 6 pieces	M18: 6 pieces	2 pieces	-	1 pieces of each

Size Chart

No.	A	B	C	D	E	F	G	H	I	J	K	L	M	N	O	P	Q	R	S	T	U	V	W	X
PV-0	70	73	50	8	42	3	9	21	23	5	46	-	-	30	12	9	13.5	25	36	5	46	-	Tr18P2	6
PV-1	127	130	64	8	56	3	10	30	32	7	62	-	-	40	16	51	15	32	48	7	62	-	Tr22P4	8
PV-2	180	186	102	20	82	7	12	40	43	12	85	18	34.5	60	22	73	19	40	65	10	85	5	Tr28P4	10
PV-3	245	250	164	29	135	10.5	15	70	73	15	120	18	49	110	25	95	22	50	80	20	120	6	Tr30P6	14

Specifications

(2 pieces per set)

Order No.	No.	Jaw Width	Minimum Height	Maximum Height	Standard Guide Block Width	Set Weight (kg)	
27331	**PV-0**	46	42	50	-	1.5	
00536	**PV-1**	62	56	64	-	4.8	
00537	**PV-2**	85	82	102	18	12.5	
00538	**PV-3**	120	135	164	18	39.1	

Usage Examples

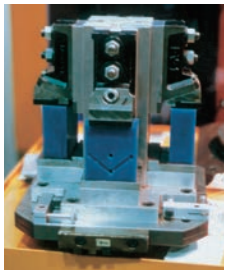

PV -0、1、2

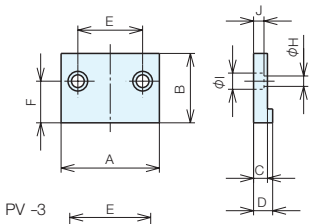

PV -3

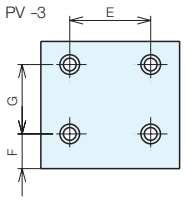

Jaw Plates/Specifications

Compatible Models	A	B	C	D	E	F	G	H	I	J	Compatible Bolts
PV-0	46	30	9	12	26	20	-	5.5	9.5	5.5	M5
PV-1	62	40	10	13	36	25	-	6.5	11	7	M6
PV-2	85	60	12	16.5	56	36	-	9	14	9	M8
PV-3	120	110	15	20	70	30	60	11	17	11	M10

Compatible Models	Standard Jaw Plates (Coarse)			Standard Jaw Plates (Smooth)		
	Order No.	No.		Order No.	No.	
PV-0	**31362**	**PV0-JA-A**		**31358**	**PV0-JA-H**	
PV-1	**31363**	**PV1-JA-A**		**31359**	**PV1-JA-H**	
PV-2	**31364**	**PV2-JA-A**		**31360**	**PV2-JA-H**	
PV-3	**31365**	**PV3-JA-A**		**31361**	**PV3-JA-H**	

Main Screw/Specifications

Compatible Models	Order No.	No.	
PV-0	**43889**	**PV0-SP**	
PV-1	**43890**	**PV1-SP**	
PV-2	**43891**	**PV2-SP**	
PV-3	**43892**	**PV3-SP**	

Reference Pages

Guide block

P.136 ▶

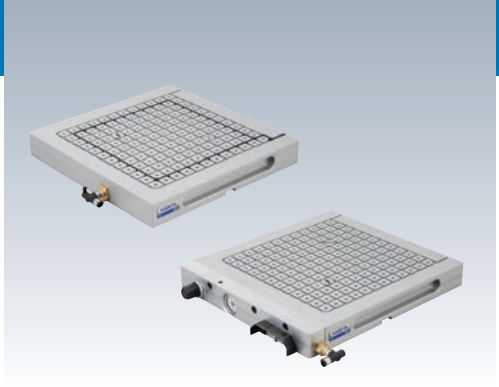

RoHS Compliant

ERON

No.E-1101

Vacuum Chucks

Material A5052 **Surface Treatment** Alumite

- Makes it possible to adsorb workpieces purely by supplying compressor air.
- Suitable for clamping non-magnetic workpieces such as aluminum, stainless steel, and copper which cannot be used with magnetic chucks.

Specifications

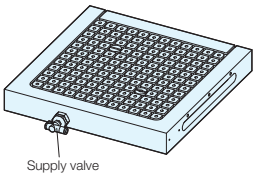

VCM0303E

The specifications of the supply valve only allow the adsorption to be on or off.

Order No.	No.	Size	Weight (kg)	
109778	**VCM0303E**	300×300×40	8.5	

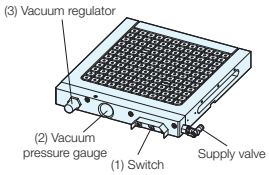

VCM0303S

(1)You can switch between adsorption and air blow using the switch.
(2)You can check the current adsorption force using the vacuum pressure gauge. (Refer to P.217 for the adsorption force calculation)
(3)The adsorption force can be adjusted using the vacuum regulator.

Order No.	No.	Size	Weight (kg)	
109779	**VCM0303S**	300×329×40	9	

External Dimensions

VCM0303E

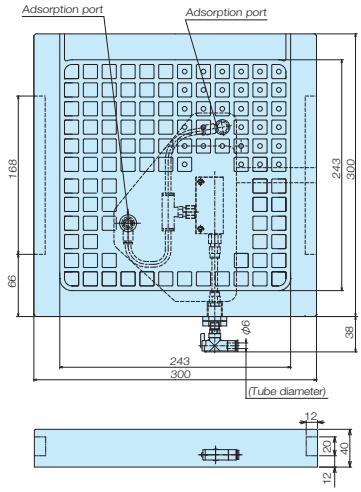

VCM0303S

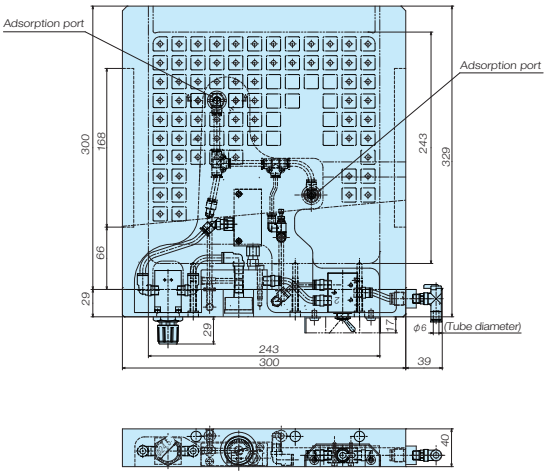

Accessories

VCM0303E･VCM0303S

Accessory Names	
Adsorption Plug	2
Plug	1
Locating Pin	5
Round rubber for sealing	1

Stopper Block A and B

Order No.	No.	Compatible Models	
114333	**VCM-SB1**	All sizes	
114334	**VCM-SB2**	All sizes	

Stopper Block A

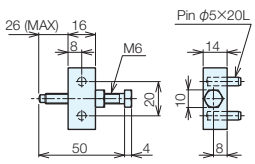

Stopper Block B

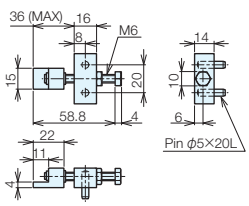

Usage Methods

(1) The adsorption surface is created by attaching an adsorption plug, plug, round for sealing, and locating pin according to the shape of workpiece.

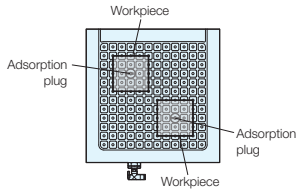

The area enclosed by the round rubber for sealing forms the adsorption area.
The adsorption area has a large effect on the adsorption force.
However, if the round rubber for sealing is on the outside of the workpiece, there is virtually no adsorption.
The area should be enclosed by as large a round rubber for sealing as possible that will fit inside the workpiece.

(2) Place the locating pin in the hole in the used surface of the vacuum chuck.

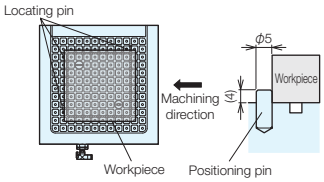

The locating pin is not only for locating the workpiece, but can also be used as a stopper against cutting resistance in the horizontal direction during cutting.
Stopper block A and stopper block B, which are sold separately, can also be mounted on holes in the used surface.

(3) Mount the workpiece, connect the air, and turn the supply valve on to activate the adsorption.

The workpiece can be removed by turning the supply valve off.

Adsorption Force

Note that these should be used as reference values since the adsorption force varies depending on the condition of the workpiece and how the round rubber for sealing is arranged.

If a vacuum pressure gauge is fitted to the VCM0303S, the adsorption force can also be calculated accurately using the following formula.

Adsorption force (N) = Vacuum pressure (kPa) × adsorption area (mm^2) × 0.001

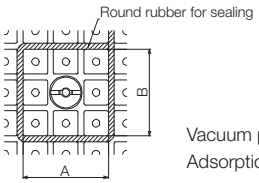

Vacuum pressure (kPa): Value on vacuum pressure gauge
Adsorption area (mm^2): A (mm) × B (mm)

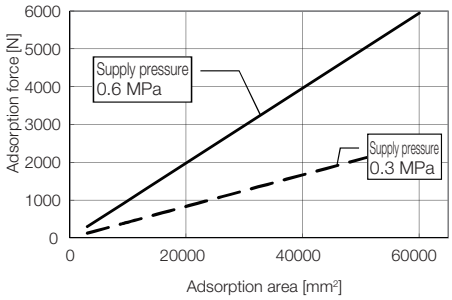

Exhaust Characteristics and Flow Rate Characteristics

The flow rate characteristics show the characteristics when the supply pressure is 0.45 MPa.

Exhaust characteristics

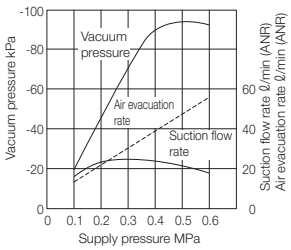

Flow rate characteristics

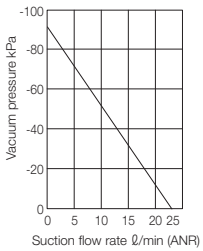

⚠ Cautions

The speed controller is shipped already adjusted. You should not adjust it yourself. Doing so could cause the vacuum pressure gauge to break.

In order to generate stable adsorption force, a pressure of 0.3 to 0.6 MPa needs to be supplied continuously. The seal rubber should be arranged so that it is inside the workpiece. If the seal rubber is outside the workpiece, it can cause the adsorption force to decrease.

Usage Examples

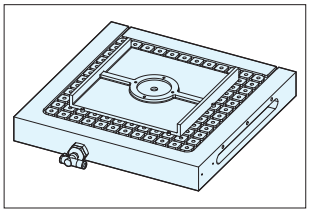

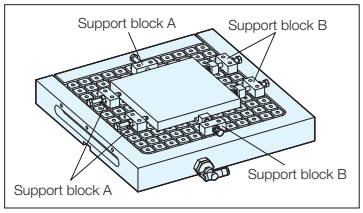

Magnetic Chucks

- Permanent electromagnetic chucks maintain clamping force even after the power cable has been disconnected.
- The workpiece is fixed by a powerful 6150N magnetic force using Neodymium magnets.
- Since the workpiece is clamped from underneath, there is no need to worry about interference with cutting tools.

Product Lineup

Magnetic Chuck Main Bodies

Vertical Magnetic Chucks

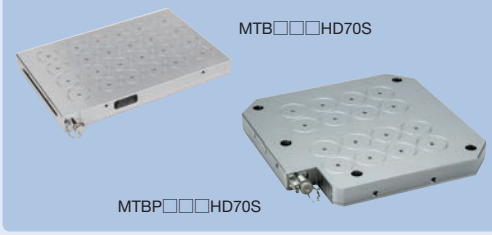

Controller (Included)

Controller ST120F

Controller ST200F

Horizontal Magnetic Chucks

With magnetic chuck MC Angle Plate

With magnetic chuck MC Tooling Blocks (2 Faces)

Peripheral Devices

Magnetic Height Block

Magnetic Height Block

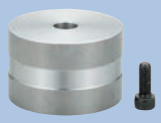

Protects the top surface of the magnetic chuck
Improves the precision of the top surface of the magnetic chuck

Magnetic Height Block with Lift Function

Supports removing workpieces that are adsorbed by residual magnetism, etc. during unclamping

Magnetic Self-cut Plate

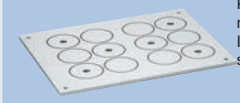

Protects the top surface of the magnetic chuck
Improves the precision of the top surface of the magnetic chuck

Magnetic Side Stopper

Stands workpieces sideways from the side face of the magnetic chuck

Mag-work Support

Supports uneven workpieces
Supports easy chattering workpieces

Clamping Accessories for Magnetic Chuck

Fixes machine tables and magnetic chucks

Base Elements
Clamp Units
Clamping Parts
Machine Vises
Drilling Vises
Vibration Isolation
Surface Plates and Measurement Instruments
Index

Features

Strong magnetic clamping force of 6150N···But will not attract chips (ϕ 70 mm per 1 magnetic pole: in case of SS400)

When the thickness of the workpiece is more than half the pole to pole distance, most chips are not attracted by magnetism and do not remain on the surface of the workpiece. Magnetism flows from N magnetic pole to S magnetic pole within the workpiece, and therefore does not attract chips.

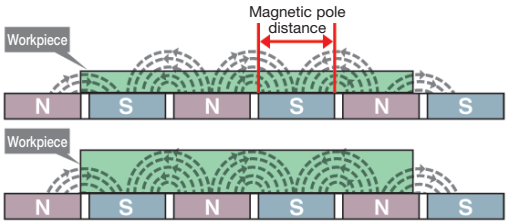

When Using Magnetic Height Blocks/Mag-work Support

For accurate and stable clamping of uneven workpieces with mill scales for face milling.

By using magnetic height blocks/mag-work support with magnetic chucks, you can clamp to suit the height reference, and can also clamp at the center of the workpiece.

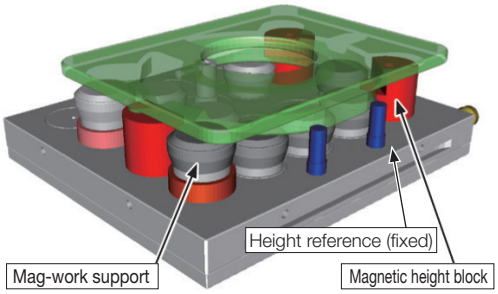

Improves work efficiency.

Whereas fastening using a tool is required in the case of a manual jig, in the case of a magnetic chuck, the workload on the worker is reduced because tools are not needed.

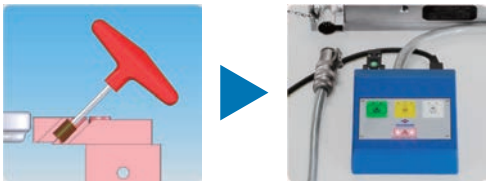

Process integration (top face and contour machining).

Whereas attention needs to be paid to interference with main spindle when selecting the clamp position in the case of a manual jig, magnetic chucks are easier and produce less areas of interference because the workpiece is clamped at the bottom.

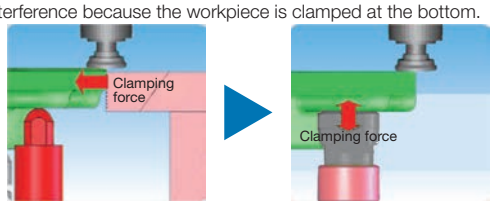

Prevents infiltration of metal working coolant.

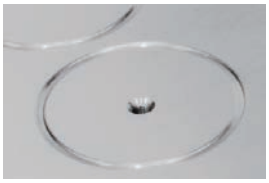

Resin and brass are not used on the top surface that the workpiece is placed on. The surface is completely metal, preventing infiltration of metal working coolant and increasing durability.

Usage Methods

(1) Insert the connector.

The unit is magnetized by turning the magnetization button (green) on.

(2) Remove the connector and attach the waterproof cover.

(3) Start machining.

(4) After machining, insert the connector again.

The unit is demagnetized by turning the demagnetization button (white) on.

(5) Replace the workpiece.

Base Elements
Clamp Units
Clamping Parts
Machine Vises
Drilling Vises
Vibration Isolation
Surface Plates and Measurement Instruments
Index

No.E-939

Magnetic Chucks

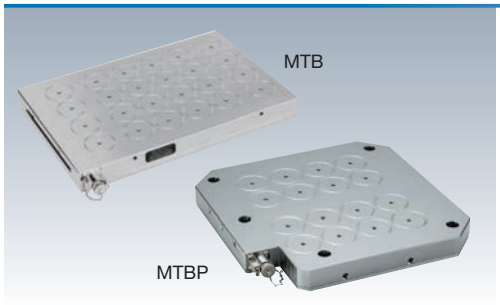

Material Main body: Structural steel

Accessories Controller 1 unit

Specifications and External Dimensions

MTB

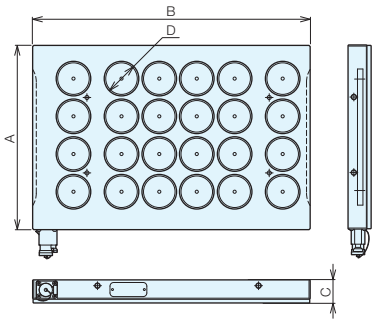

MTBP

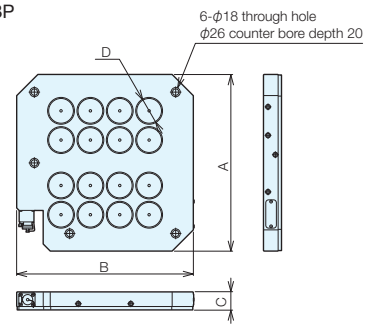

MTB Specifications

Order No.	No.	Size A × B × C	Magnetic Pole Size D	No. of Magnetic Poles	Magnetic Force (Per Pole) N	Magnetic Force (Overall) kN	Model of Controller	Weight (kg)
107666	MTB304HD70S	320×425×51	ϕ 70	12	6150	73	ST120F	50
107667	MTB306HD70S	320×610×51		18		110	ST120F	72
107668	MTB308HD70S	320×800×51		24		147	ST120F	95
107669	MTB310HD70S	320×965×51		30		184	ST120F	114
107670	MTB404HD70S	405×425×51		16		98	ST120F	64
107671	MTB406HD70S	405×610×51		24		147	ST120F	91
107672	MTB408HD70S	405×800×51		32		196	ST120F	120
107673	MTB410HD70S	405×965×51		40		246	ST200F	145
107674	MTB504HD70S	485×425×51		20		123	ST120F	76
107675	MTB506HD70S	485×610×51		30		184	ST120F	110
107676	MTB508HD70S	485×800×51		40		246	ST200F	144
107677	MTB510HD70S	485×965×51		50		307	ST200F	173
107678	MTB606HD70S	570×610×51		36		221	ST200F	128
107679	MTB608HD70S	570×800×51		48		295	ST200F	169

MTBP Specifications

Order No.	No.	Size A × B × C	Magnetic Pole Size D	No. of Magnetic Poles	Magnetic Force (Per Pole) N	Magnetic Force (Overall) kN	Model of Controller	Weight (kg)
114997	MTBP500HD70S	500×500×51	ϕ 70	16	6150	98	ST120F	88
114998	MTBP630HD70S	630×630×51		30	6150	184	ST120F	117

Reference Pages

Base Elements
Clamp Units
Clamping Parts
Machine Vises
Drilling Vises
Vibration Isolation
Surface Plates and Measurement Instruments
Index

MC Angle Plates with Magnetic Chuck/MC Tooling Blocks with Magnetic Chuck ERON®

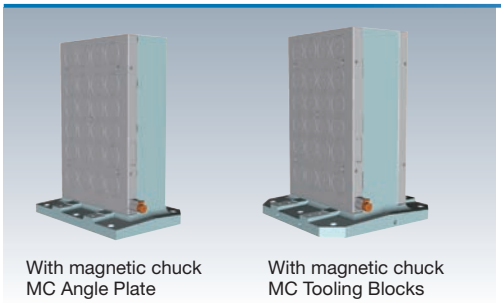

With magnetic chuck MC Angle Plate

With magnetic chuck MC Tooling Blocks

Material Magnetic chuck main body: Structural steel
MC Angle Plate and
MC Tooling Block: FC250

Accessories Controller 1 unit

Specifications and External Dimensions

Magnetic Chuck with Angle Plate

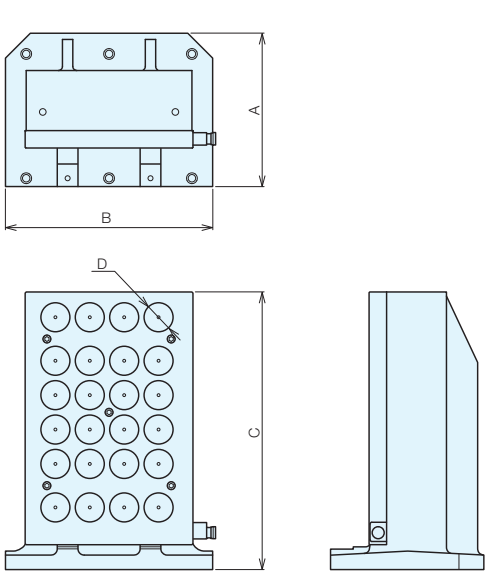

Magnetic Chuck with Tombstone

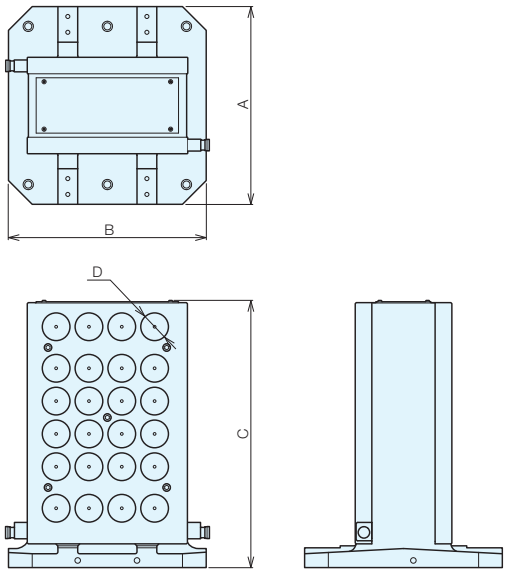

Magnetic Chuck with Angle Plate - Specifications

Order No.	No.	Size A × B × C	Magnetic Pole Size D	No. of Magnetic Poles	Magnetic Force (Per Pole) N	Magnetic Force (Overall) kN	Model of Controller	Weight (kg)
109148	**GTM500-406HD**	370x500x670	ϕ 70	24	6150	147	ST120F	270

Magnetic Chuck with Tombstone - Specifications

Order No.	No.	Size A × B × C	Magnetic Pole Size D	No. of Magnetic Poles (Per Face)	Magnetic Force (Per Pole) N	Magnetic Force (Overall) kN	Model of Controller	Weight (kg)
109149	**TBM5002-406HD**	500x500x675	ϕ 70	24	6150	147	ST120F	330
109150	**TBM6302-606HD**	630x630x675	ϕ 70	36	6150	221	ST200F	460

Reference Pages

Base Elements
Clamp Units
Clamping Parts
Machine Vises
Drilling Vises
Vibration Isolation
Surface Plates and Measurement Instruments
Index

Base Elements
Clamp Units
Clamping Parts
Machine Vises
Drilling Vises
Vibration Isolation
Surface Plates and Measurement Instruments
Index

No.E-939

Magnetic Height Block

Material Structural steel

Accessories Mounting bolt

- Protects the top surface of the magnetic chuck
- Improves the precision of the top surface of the magnetic chuck (enables self-cut)
- Fixed by mounting bolt
- Avoids interference with through hole drills and the workpiece, etc.

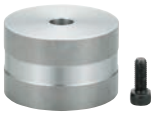

Specifications

Order No.	No.	A	B	Weight (kg)
114993	MHB-R70C-15	70	15	0.4
110442	MHB-R70C-45	70	45	1.3
114994	MHB-R50C-32	50	32	0.5

Usage Examples

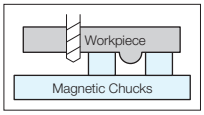

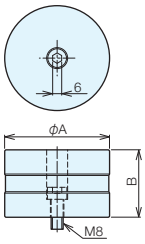

No.E-939

Magnetic Height Block with Lift Function

Material S45C

Accessories Mounting bolt

- Supports removing workpieces that are adsorbed by residual magnetism, etc. during unclamping

Specifications

Order No.	No.	A	B	Weight (kg)
114995	MHB L -R70C-32	70	32	0.9
114996	MHB L -R70C-45	70	45	1.3

Usage Examples

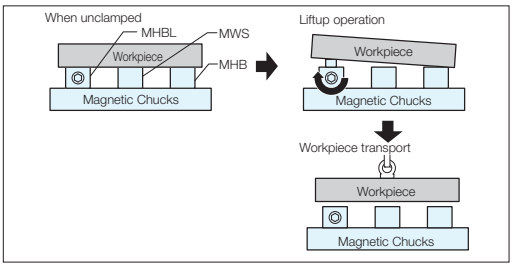

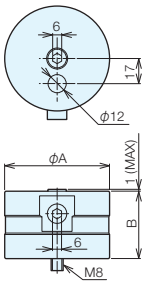

No.E-939

Mag-work Support

- Supports uneven workpieces
- Supports easy chattering workpieces

Specifications

Order No.	No.	A	B	C	D	Weight (kg)
100968	MWS-R50-32	ϕ 57	32	2.5	1.5	0.4
110174	MWS-R76V-45	ϕ 76	45	3	3	1.3

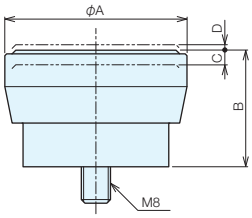

Accuracy stability of face milling for deformed workpieces or castings with a rough surface

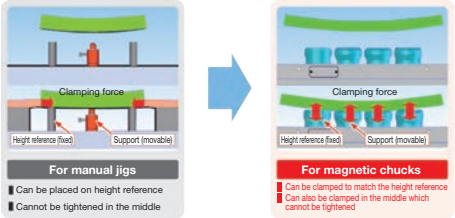

No.E-939

Controllers ST120F/ST200F

ST120F

ST200F

Specifications

Power supply: 200 V AC single phase 50/60 Hz
Power cable length: 3.5m
Output cable length: ST120F 2.5m/ST200 4.5m

Specifications and External Dimensions

Order No.	No.	Weight (kg)
107694	ST120F	2.5

ST120F

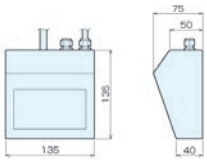

Order No.	No.	Weight (kg)
107695	ST200F	5.9

ST200F

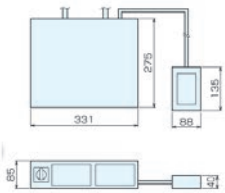

No.E-939

Magnetic Self-cut Plate

Material Structural steel, plastic **Accessories** Attachment bolt MB X 10 Maximum tightening torque 10 Nm
Self-cut Allowance 4 mm

- Protects the top surface of the magnetic chuck
- Improves the precision of the top surface of the magnetic chuck (enables self-cut)

Usage Examples

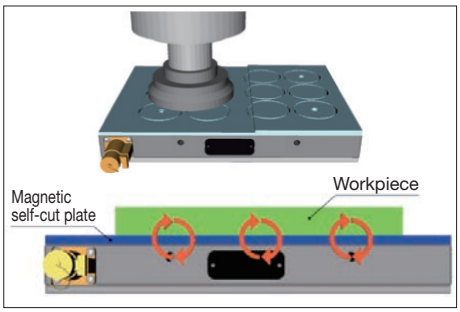

Specifications

Order No.	No.	A	B	C (No. of Magnetic Poles)	Compatible Chucks	Weight (kg)
109151	MSC304HD70	318	423	12	MTB304HD70	9.4
109152	MSC306HD70	318	608	18	MTB306HD70	13.6
109153	MSC308HD70	318	798	24	MTB308HD70	17.8
109154	MSC310HD70	318	963	30	MTB310HD70	21.5
109155	MSC404HD70	403	423	16	MTB404HD70	12.0
109156	MSC406HD70	403	608	24	MTB406HD70	17.2
109157	MSC408HD70	403	798	32	MTB408HD70	22.6
109158	MSC410HD70	403	963	40	MTB410HD70	27.2
109159	MSC504HD70	483	423	20	MTB504HD70	14.3
109160	MSC506HD70	483	608	30	MTB506HD70	20.6
109161	MSC508HD70	483	798	40	MTB508HD70	27.1
109162	MSC510HD70	483	963	50	MTB510HD70	32.7
109163	MSC606HD70	568	608	36	MTB606HD70	25.5
109164	MSC608HD70	568	798	48	MTB608HD70	33.5

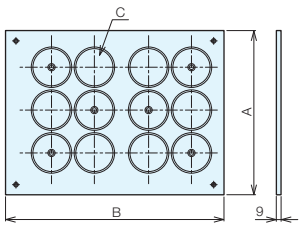

* The positions of the mounting holes differ depending on the size.

No.E-939

Side Stopper

Material S50C

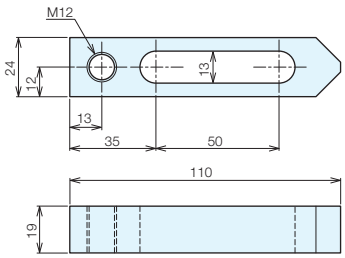

Usage Examples

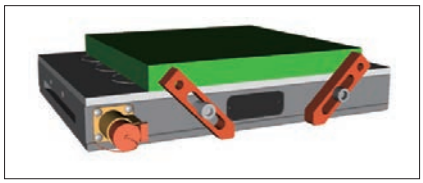

Specifications

Order No.	No.	Screw Dia.	Weight (kg)
109166	MT-SS110	M12	0.23

No.E-939

Clamping Accessories for Magnetic Chuck

Specifications

(4 pieces per set)

Order No.	No.	T-slot	Weight (kg)
109165	MTB-CS18	18	1.6

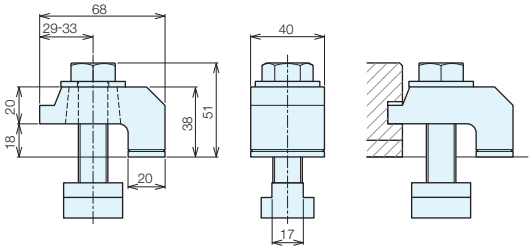

Applications

Vertical Machining Center

Vertical Machining Center

Vertical Machining Center

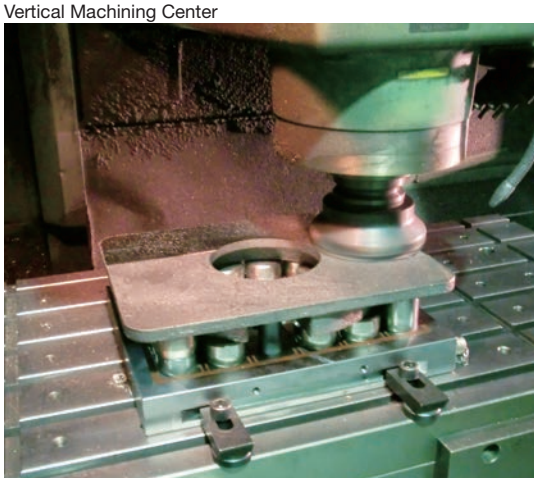

Horizontal Machining Center

Horizontal Machining Center

Horizontal Machining Center

Base Elements
Clamp Units
Clamping Parts
Machine Vises
Drilling Vises
Vibration Isolation
Surface Plates and Measurement Instruments
Index

Applications

Double Column Type Machining Center

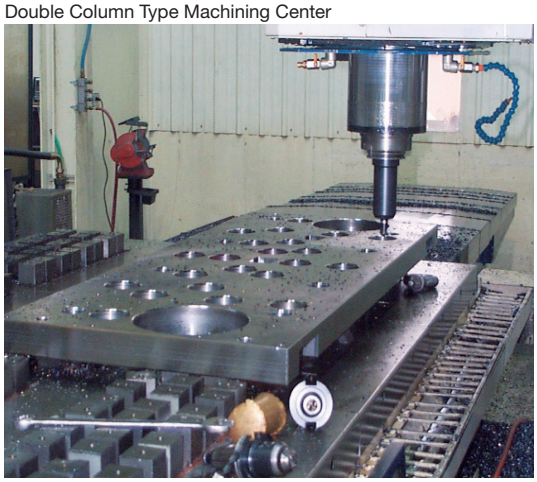

Double Column Type Machining Center

Double Column Type Machining Center

5-axis Machining Center

5-axis Machining Center

5-axis Machining Center

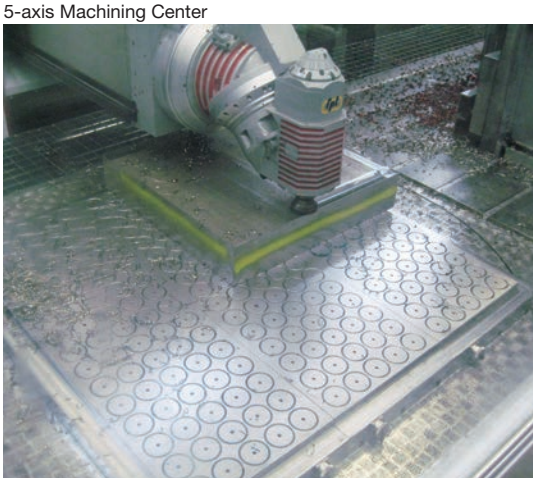

Cautions

The magnetic clamping force varies depending on various conditions.
Before use, you should investigate and take conditions (1) to (9) into account to determine whether you can use these products.

(1) Conditions on magnetic clamping force Magnetic flux density

The amount of magnetic flux passing through the workpiece is a condition for determining the magnetic clamping force. For the best clamping, as much magnetic flux as possible needs to be taken into the workpiece.

In the case of general clamping, as much magnetic flux as possible can be taken into the workpiece by correctly placing the workpiece on the N and S poles of the permanent electromagnetic chuck. (Fig. 1)

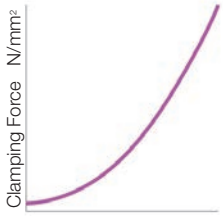

Fig. 1 Magnetic flux density

(2) Conditions on magnetic clamping force Contact area

If the contact area is doubled, then the amount of magnetic flux passing through the workpiece doubles, and the clamping force also doubles. (Fig. 2)

The magnetic clamping force also grows stronger the larger the contact area. (Fig. 3)

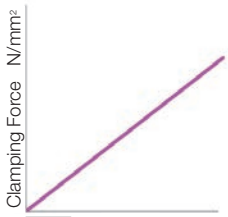

Fig. 2 Contact area

(3) Conditions on magnetic clamping force Height of leveling block

As the height of the leveling block increases, the amount of magnetic flux through the workpiece decreases. You should take the attenuation rate from the following graph taken into account. (Fig. 4)

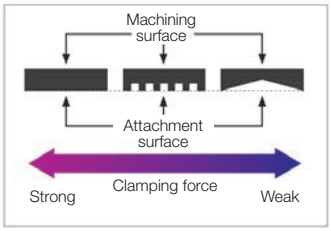

Fig. 3

(4) Conditions on magnetic clamping force Workpiece material

You should take into account the attenuation rate due to the material of the workpiece or jig plate. (Fig. 5)

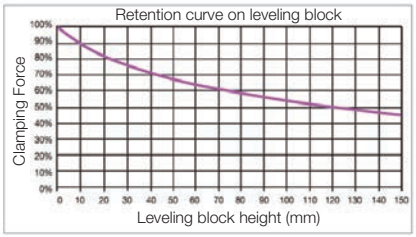

Fig. 4

Attenuation Rate	Material
100%	SS400
98%	S50C, SCM420
90%	SK3
80%	SUS430, FCD600, SKH51
70%	SKD11, FC250
0%	Brass, aluminum SUS200 and SUS300 series, Titanium

Strong
Clamping force
Weak or zero

Fig. 5

(5) Conditions on magnetic clamping force Surface condition of the workpiece

The magnetic clamping force per unit area varies depending on the surface condition of the workpiece or jig plate. You should determine the magnetic clamping force using the appropriate value. (Fig. 6)

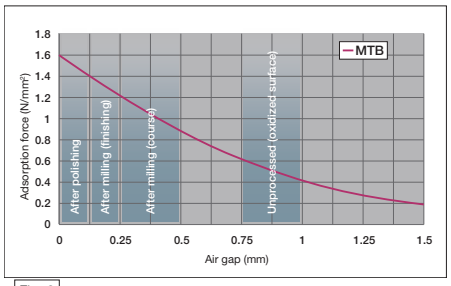

Fig. 6

Base Elements
Clamp Units
Clamping Parts
Machine Vises
Drilling Vises
Vibration Isolation
Surface Plates and Measurement Instruments
Index

Cautions

(6) Conditions on magnetic clamping force Recommended workpiece size

The magnetic flux in the workpiece traces a semicircular path from the center of one pole of the magnetic chuck to the center of the other pole. If the workpiece is thinner than this semicircle path, the magnetic flux will extend out from the workpiece and will not produce the clamping force properly. You should use workpieces of appropriate thickness (greater than or equal to the workpiece minimum size) such that the magnetic flux is fully contained within the workpiece.

Furthermore, in order to ensure that you obtain the maximum magnetic clamping force, you should use a workpiece of size that covers 4 or more poles (greater than or equal to the workpiece minimum size). (Fig. 7)

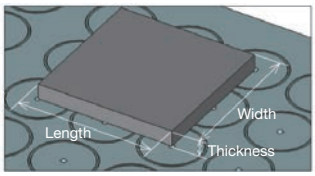

Fig. 7

Recommended Workpiece Size

No.	Length × Width × Thickness
MTB-HD70	166 × 166 × 19 or greater

(7) Conditions on magnetic clamping force Clamping force calculation on magnetic chuck

Clamping Force N = Contact Area on Magnetic Poles mm² × Distance From Workpiece to Magnetic Chuck Attenuation Rate % × Workpiece Material Attenuation Rate % × Clamping Force Depending on Surface Condition of Workpiece N/mm² × Safety Coefficient 0.5

[Example of Calculating the Adsorption Force (Clamping Force)] (When size of workpiece = 300 × 300 × 35 mm and material = FC250)

Contact Area on Magnetic Poles	61,544 mm²
Distance From Workpiece to Magnetic Chuck Attenuation Rate	Leveling block height 45mm. Attenuation rate 70%.
Workpiece Material Attenuation Rate	FC250. Attenuation rate 70%.
Clamping Force Depending on Surface Condition of Workpiece	Pre-machined workpiece with cast surface 0.6N/mm²
Safety Coefficient	0.5
Clamping Force	61,544×0.7×0.7×0.6×0.5 = 9,047 N

(8) Conditions on machining Direction of cutting thrust

If the direction of the cutting thrust is horizontal against the contact surface, the magnetic clamping force, needs to be approximately 3 to 10 times the force of the cutting thrust. (Friction coefficient of 0.1 to 0.3)

If you cannot obtain the required clamping force, one solution is to greatly reduce the magnetic clamping force required for machining by placing a locating workstop (stopper) facing the direction of the cutting thrust. (Fig. 8)

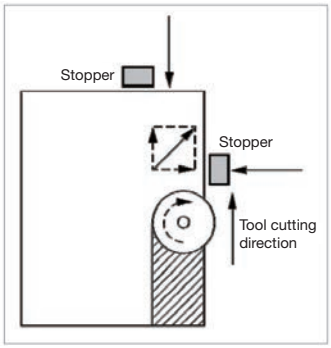

Fig. 8

(9) Conditions on residual magnetism Using a demagnetizer

Hardened workpiece may be difficult to remove from the magnetic chuck since the magnetism may remain (residual magnetism). Residual magnetism can be removed by using a demagnetizer.

Clamp Units

■What are Clamp Units?

Clamp units are a class of "clamping tool" that consist of multiple parts that can separately attach to the base and clamp workpieces. Clamp units apply a clamping force to the workpiece via a media that uses a mechanism to transmit force from a force generation source (manual, pneumatic, or hydraulic). In these examples, the transmission mechanism is a mechanism such as a screw or cam, and the medium is a clamp bar. Clamp units are categorized into vertical types and horizontal types depending on the direction in which the clamping force is generated.

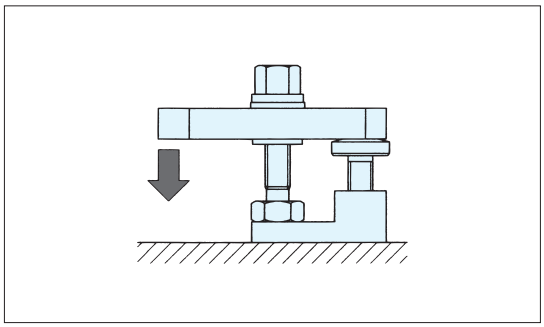

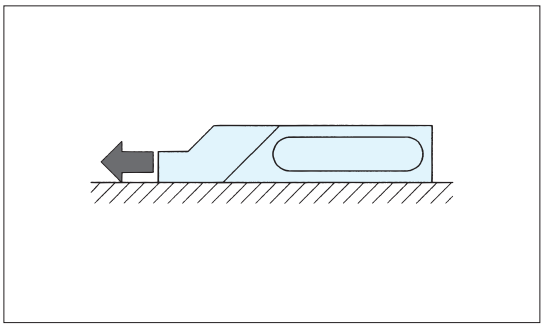

Base Elements
Clamp Units
Clamping Parts
Machine Vises
Drilling Vises
Vibration Isolation
Surface Plates and Measurement Instruments
Index

■ Selection

Clamp units need to be chosen by taking into account the characteristics of the workpieces (shape, size, accuracy, amount of machining, etc.), the capabilities of the attachment base and machining tools, other jig elements, etc.

(1) The shapes and sizes of clamp units are affected by interference with other elements and attachment space.

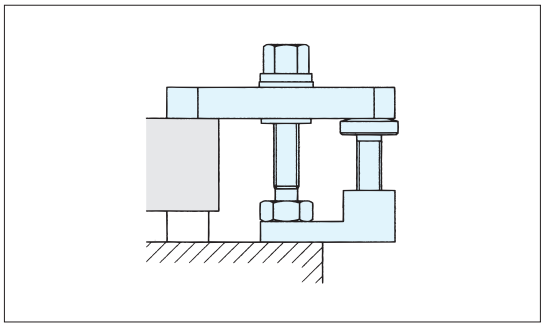

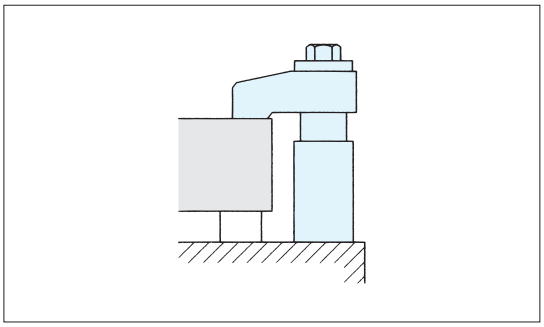

(2) Stroke is the range of motion that occurs when the clamp unit is clamping (or unclamping) a workpiece, and the clamping position needs to be set within the stroke range. The stroke range also has an effect on the ability to desorb the workpiece.

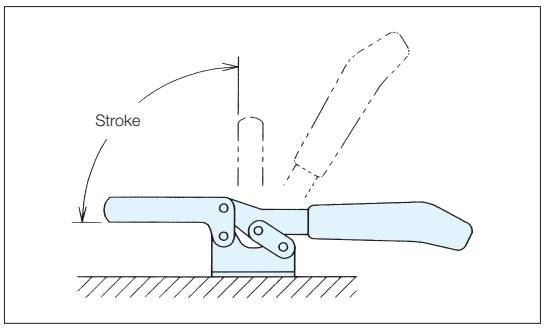

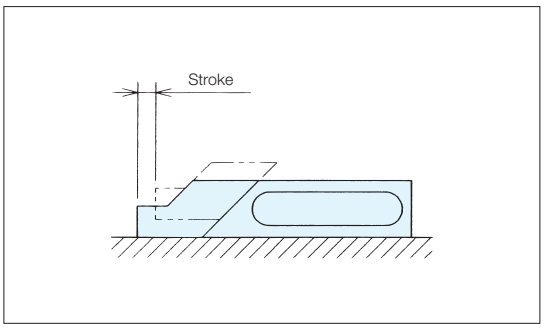

(3) If you require handling of a wide variety of shapes and sizes of workpieces, it is convenient to choose a highly expandable clamp unit.

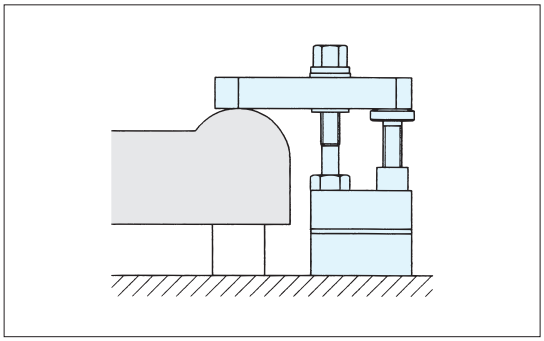

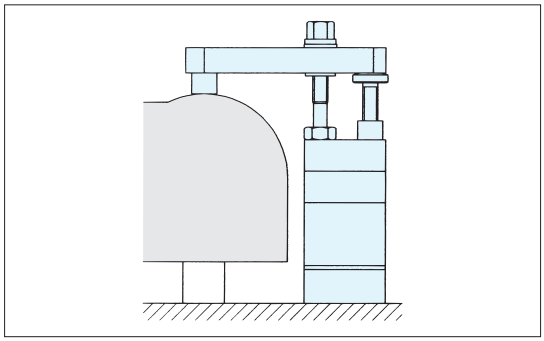

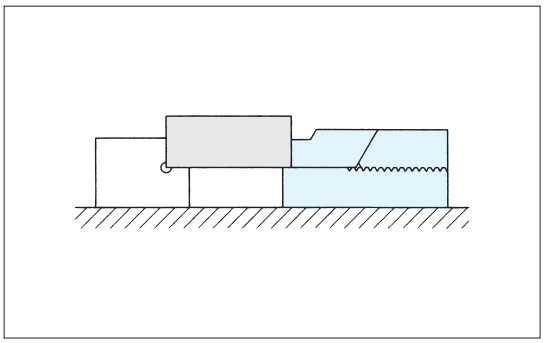

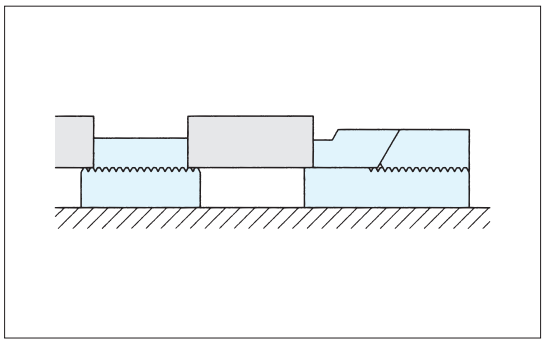

(4) Operability leads to reduced set-up time and improved work efficiency.

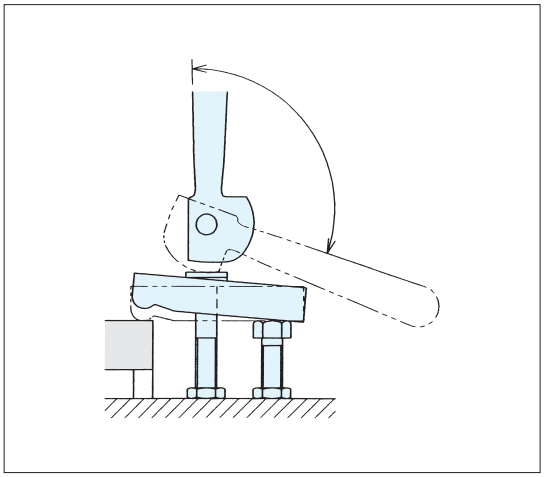

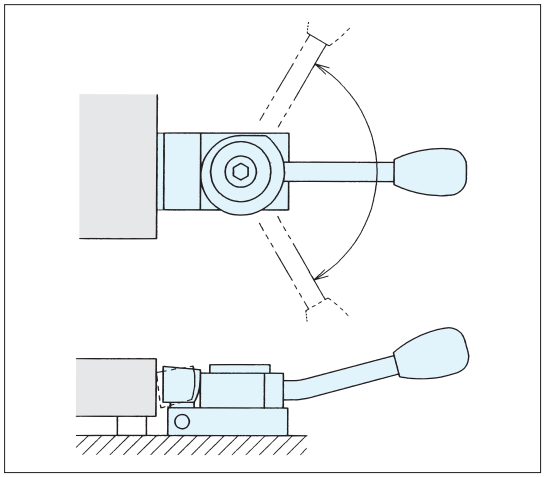

MEMO

Base Elements
Clamp Units
Clamping Parts
Machine Vises
Drilling Vises
Vibration Isolation
Surface Plates and Measurement Instruments
Index

Clamping Parts

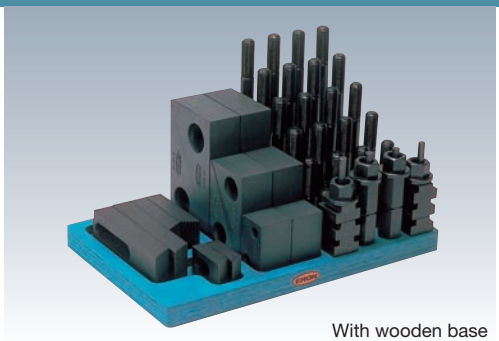

With wooden base

RoHS Compliant

ERON

No.E-412

Clamping Kits

Material S45C and S45C sintered alloy
Heat Treatment Heat treatment
Surface Treatment Blackened

Kit Contents

Step Blocks
2 sets each of STB1, 2, and 3
2 sets each of STB4, 5, and 6
2 sets each of STB7, 8, and 9
or
1 set

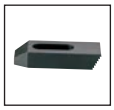

Step Clamps
To match bolt diameters
2 pieces of each

T and S sets

Stud Bolts
75, 100, 125, 150, 175, 200m/m
to match bolt diameters
4 pieces of each

Flanged Nuts
4 pieces to match bolt diameters

Coupling Nuts
4 pieces to match bolt diameters

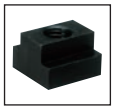

T-Slot Nuts
6 pieces to match bolt diameters

Specifications

Order No.	No.	Compatible T-slot Width	Screw Diameter (Coarse Thread)	T and S sets	Step Clamps (2 Pieces of Each)	Step Blocks (2 Sets of Each)	Weight (kg)
01050	CMM0108	10	M8×1.25	1 set	STC0101/STC0102/STC0103	STB-1/STB-2/STB-3	7.5
01051	CMM1210	12	M10×1.5	1 set	STC0201/STC0202/STC0203	STB-1/STB-2/STB-3	8.1
01052	CMM1410	14	M10×1.5	1 set	STC0201/STC0202/STC0203	STB-1/STB-2/STB-3	10.1
01053	CMM1412	14	M12×1.75	1 set	STC0301/STC0302/STC0303	STB-1/STB-2/STB-3	10.5
01054	CMM1612	16	M12×1.75	1 set	STC0301/STC0302/STC0303	STB-1/STB-2/STB-3	11.0
01055	CMM1614	16	M14×2	1 set	STC0401/STC0402/STC0403	STB-1/STB-2/STB-3	12.5
01056	CMM1814	18	M14×2	1 set	STC0401/STC0402/STC0403	STB-1/STB-2/STB-3	15.5
01057	CMM1816	18	M16×2	1 set	STC0401/STC0402/STC0403	STB-1/STB-2/STB-3	19.5
01058	CMG1612	16	M12×1.75	1 set	STC0301/STC0302/STC0303	STB-4/STB-5/STB-6	22.0
01059	CMG1614	16	M14×2	1 set	STC0401/STC0402/STC0403	STB-4/STB-5/STB-6	23.5
01060	CMG1814	18	M14×2	1 set	STC0401/STC0402/STC0403	STB-4/STB-5/STB-6	24.0
01061	CMG1816	18	M16×2	1 set	STC0401/STC0402/STC0403	STB-4/STB-5/STB-6	24.5
01062	CMG2016	20	M16×2	1 set	STC0401/STC0402/STC0403	STB-4/STB-5/STB-6	24.5
01063	CMG2018	20	M18×2.5	1 set	STC0501/STC0502/STC0503	STB-4/STB-5/STB-6	25.0
01064	CMG2218	22	M18×2.5	1 set	STC0501/STC0502/STC0503	STB-4/STB-5/STB-6	25.0
01065	CMG2220	22	M20×2.5	1 set	STC0501/STC0502/STC0503	STB-4/STB-5/STB-6	27.0
01066	CMG2418	24	M18×2.5	1 set	STC0501/STC0502/STC0503	STB-4/STB-5/STB-6	25.0
01067	CMG2420	24	M20×2.5	1 set	STC0501/STC0502/STC0503	STB-4/STB-5/STB-6	32.0
01068	CMG2620	26	M20×2.5	1 set	STC0501/STC0502/STC0503	STB-4/STB-5/STB-6	37.0
01069	CMH2622	26	M22×2.5	1 set	STC0601/STC0602/STC0603	STB-7/STB-8/STB-9	43.0
01070	CMH2822	28	M22×2.5	1 set	STC0601/STC0602/STC0603	STB-7/STB-8/STB-9	42.0
01071	CMH2824	28	M24×3	1 set	STC0701/STC0702/STC0703	STB-7/STB-8/STB-9	44.0

Usage Examples

Base Elements
Clamp Units
Clamping Parts
Machine Vises
Drilling Vises
Vibration Isolation
Surface Plates and Measurement Instruments
Index

In metal case (with storage case)

RoHS Compliant

ERON®

No.E-412SM

Clamping Kits with Metal Racks

Material S45C and S45C sintered alloy
Heat Treatment Heat treatment
Surface Treatment Blackened

Kit Contents

Step Blocks
2 sets each of STB1, 2, and 3 / 2 sets each of STB4, 5, and 6 — or 1 set

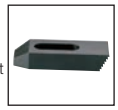

Step Clamps
To match bolt diameters
2 pieces of each

T and S sets

Stud Bolts
75, 100, 125, 150, 175, 200m/m
to match bolt diameters
4 pieces of each

Flanged Nuts
6 pieces to match bolt diameters

Coupling Nuts
4 pieces to match bolt diameters

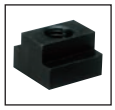

T-Slot Nuts
6 pieces to match bolt diameters

Specifications

Order No.	No.	Compatible T-slot Width	Screw Diameter (Coarse Thread)	T and S sets	Step Clamps (2 Pieces of Each)	Step Blocks (2 Sets of Each)	Weight (kg)
01094	CMR1412	14	M12×1.75	1 set	STC0301/STC0302/STC0303	STB-1/STB-2/STB-3	11
01118	CMR1612	16	M12×1.75	1 set	STC0301/STC0302/STC0303	STB-1/STB-2/STB-3	11
01119	CMR1614	16	M14×2	1 set	STC0401/STC0402/STC0403	STB-1/STB-2/STB-3	13
01120	CMH1614	16	M14×2	1 set	STC0401/STC0402/STC0403	STB-4/STB-5/STB-6	23
01121	CMH1816	18	M16×2	1 set	STC0401/STC0402/STC0403	STB-4/STB-5/STB-6	25

In Metal Case (With Storage Case)

RoHS Compliant

ERON®

No.E-411SM

T-Slot Nuts & Studs Sets with Metal Racks

Material S45C Heat Treatment Heat treatment
Surface Treatment Blackened

Kit Contents

Stud Bolts
75, 100, 125, 150, 175, 200m/m
to match bolt diameters
4 pieces of each

Flanged Nuts
4 pieces to match bolt diameters

Coupling Nuts
4 pieces to match bolt diameters

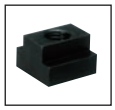

T-Slot Nuts
6 pieces to match bolt diameters

Specifications

Order No.	No.	Compatible T-slot Width	Screw Diameter (Coarse Thread)	T-Slot Nuts (6 Pieces)	Flanged Nuts (4 Pieces)	Coupling Nuts (4 Pieces)	Stud Bolts (4 Pieces of Each)	Weight (kg)
01095	SSM1412	14	M12×1.75	TNM1412	FNM0012	CNM0012	BM01275, 12100, 12125, 12150, 12175, 12200	4.4
01122	SSM1612	16	M12×1.75	TNM1612	FNM0012	CNM0012	BM01275, 12100, 12125, 12150, 12175, 12200	4.5
01123	SSM1614	16	M14×2	TNM1614	FNM0014	CNM0014	BM01475, 14100, 14125, 14150, 14175, 14200	5.7
01124	SSM1814	18	M14×2	TNM1814	FNM0014	CNM0014	BM01475, 14100, 14125, 14150, 14175, 14200	5.8
01125	SSM1816	18	M16×2	TNM1816	FNM0016	CNM0016	BM01675, 16100, 16125, 16150, 16175, 16200	7.0
01126	SSM2016	20	M16×2	TNM2016	FNM0016	CNM0016	BM01675, 16100, 16125, 16150, 16175, 16200	8.0

Base Elements
Clamp Units
Clamping Parts
Machine Vises
Drilling Vises
Vibration Isolation
Surface Plates and Measurement Instruments
Index

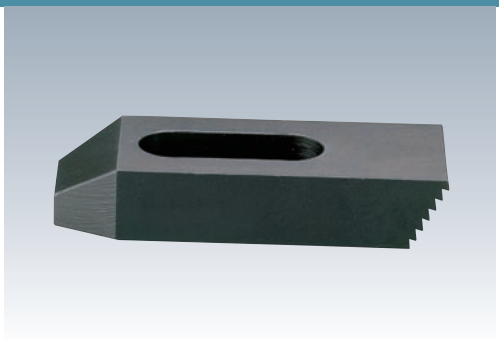

RoHS Compliant

ERON

No.E-413

Step Clamps

Material S45C Heat Treatment HRC30 ± 5 heat treatment
Surface Treatment Blackened

- Used paired with step blocks.

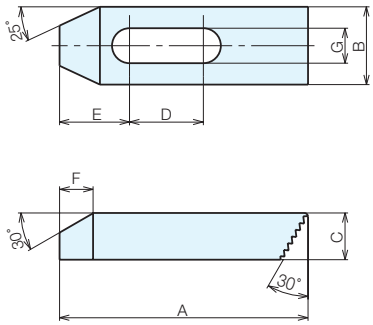

Specifications

Order No.	No.	Compatible Bolts	A	B	C	D	E	F	G	Weight (kg)
01106	STC0101	M8	60	25	12	21	20	11	9	0.06
01993	STC0102	M8	100	25	16	38	23	14	9	0.12
01994	STC0103	M8	150	25	19	73	27	17	9	0.24
01995	STC0201	M10	60	25	12	19	22	11	11	0.06
01996	STC0202	M10	100	25	16	38	25	14	11	0.12
01997	STC0203	M10	150	25	19	56	28	17	11	0.26
01998	STC0301	M12	60	25	12	18	23	11	13	0.06
01999	STC0302	M12	100	32	19	32	28	17	13	0.17
02000	STC0303	M12	150	32	22	51	33	19	13	0.29
02001	STC0401	M16	60	32	16	10	27	14	18	0.08
02002	STC0402	M16	100	38	19	31	31	17	18	0.20
02003	STC0403	M16	150	38	22	48	33	19	18	0.35
02004	STC0501	M20	100	38	19	27	31	17	22	0.19
02005	STC0502	M20	150	38	25	48	38	22	22	0.37
02006	STC0503	M20	200	50	30	80	41	25	22	0.68
02007	STC0601	M22	150	50	32	42	44	27	24	0.65
02008	STC0602	M22	200	50	32	70	47	30	24	0.95
02009	STC0603	M22	250	50	38	102	52	33	24	1.28
02010	STC0701	M24	150	50	32	42	46	27	26	0.65
02011	STC0702	M24	200	50	32	70	49	30	26	0.90
02012	STC0703	M24	250	50	38	102	52	33	26	1.22

Usage Examples

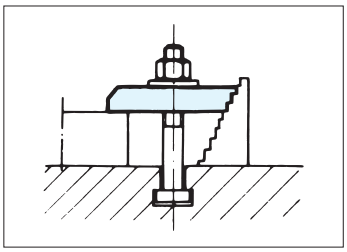

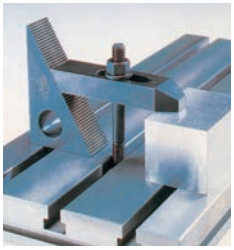

Reference Pages

Step Blocks

P.85

RoHS Compliant

ERON

No.E-428

Injection Clamps

Material Bainite cast iron

Accessories Adjustment support screw 1 piece, bolt 1 piece, washer 2 pieces

- The main body is bainite cast iron, and will not break even under strong clamping forces.
- Can also be used for clamping molds for injection machines as well as clamping for machining.
- Can also be used with a T-slot table as long as you use T-slot nuts.

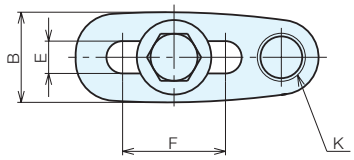

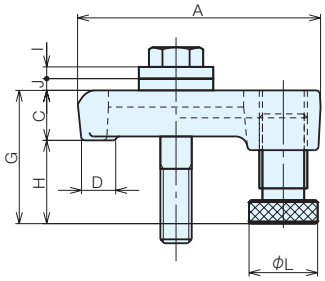

Specifications

Order No.	No.	Screw Diameter (Coarse Thread)	A	B	C	D	E	F	G	H	I	J	K	L
10665	ICM0012	M12×1.75	99	39	22.5	16	13	38	37.5-58.5	17-36	5	5	Tr20P2	35
10666	ICM0016	M16×2	124	46	25.5	18	17	52.5	43-68	19-44	6	6	Tr24P3	35
10667	ICM0020	M20×2.5	156	56	30.5	23	21	69	52.5-81.5	23-51	8	8	Tr28P3	45

Base Elements
Clamp Units
Clamping Parts
Machine Vises
Drilling Vises
Vibration Isolation
Surface Plates and Measurement Instruments
Index

RoHS Compliant

ERON

No.E-428Q

Injection Clamps Type Q

Type	Material	Heat Treatment	Surface Treatment
Clamp bar	FCAD900	–	Cationic coating
Step Blocks	S45C	–	Blackened
Washer	S45C	HRC30±5 heat treatment	Blackened

- Mold base can be clamped quickly.
- The clamps and step blocks are connected, and cannot be lost.
- The slotted hole of the clamp is open, making it easy to insert and remove from the side.

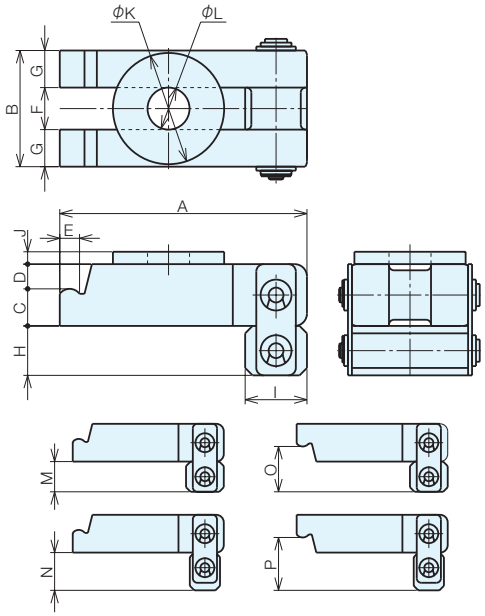

Specifications

Order No.	No.	Compatible Bolts	A	B	C	D	E	F	G	H	I	J	K	L	M	N	O	P	Weight (kg)
62518	ICQ12	M12	80	37	15	10	8	13	12	20	25	5	35	13	20	25	30	35	0.78
62519	ICQ16	M16	100	47	15	10	8	17	15	20	25	5	45	17	20	25	30	35	1.2
62520	ICQ20	M20	150	60	20	10	8	21	19.5	40	45	5	58	21	40	45	50	55	2.5
62521	ICQ24	M24	200	75	30	10	12	25	25	40	45	5	60	25	40	45	50	55	4.0

Base Elements
Clamp Units
Clamping Parts
Machine Vises
Drilling Vises
Vibration Isolation
Surface Plates and Measurement Instruments
Index

RoHS Compliant

ERON

No.E-414

Step Blocks

Material S45C sintered alloy

Heat Treatment HRB92 $^{+3}_{0}$ heat treatment

Surface Treatment Blackened

- The step angles of STB1 to 9 are all the same, and can be used combined.
- Parallelism can be maintained regardless of the combination.

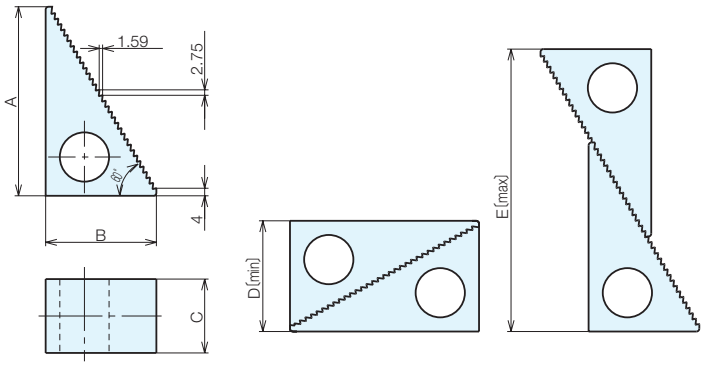

Specifications

Order No.	No.	A	B	C	D	E	Weight (kg)
14929	**STB-1**	28.8	17.4	25.3	19	46	0.10
14930	**STB-2**	45.3	26.9	25.3	28	68	0.24
14931	**STB-3**	97.5	57.1	25.3	58	150	0.84
14932	**STB-4**	59.0	34.9	38.1	36	90	0.52
14933	**STB-5**	97.5	57.1	38.1	58	150	1.25
14934	**STB-6**	138.8	80.9	38.1	82	210	2.54
14935	**STB-7**	59.0	34.9	50.8	36	90	0.70
14936	**STB-8**	97.5	57.1	50.8	58	150	1.66
14937	**STB-9**	138.8	80.9	50.8	82	210	3.43

Usage Examples

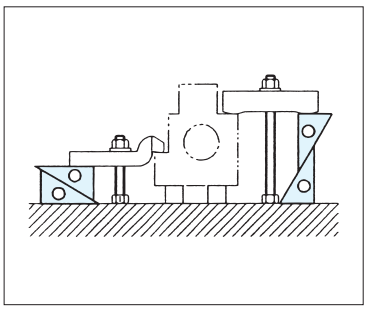

RoHS Compliant

ERON®

No.E-403

Flanged Nuts

Material S45C Heat Treatment HRC30 ± 5 heat treatment
Surface Treatment Blackened

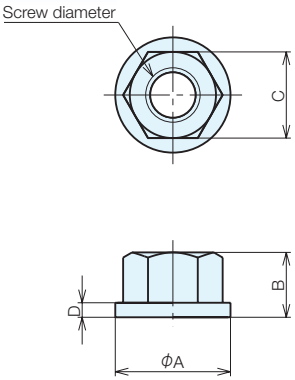

Specifications

Order No.	No.	Screw Diameter (Coarse Thread)	A	B	C	D	Weight (g)
01110	**FNM0008**	M8 ×1.25	19	12	13	2.5	13
02659	**FNM0010**	M10×1.5	22	13	17	3	22
02660	**FNM0012**	M12×1.75	25	14	19	4	34
02661	**FNM0014**	M14×2	28	17	22	4	40
02662	**FNM0016**	M16×2	35	20	24	5	68
02663	**FNM0018**	M18×2.5	35	20	27	5	80
02664	**FNM0020**	M20×2.5	40	25	30	6	120
02665	**FNM0022**	M22×2.5	42	25	32	6	127
02666	**FNM0024**	M24×3	45	28	36	6	180
95976	**FNM0030**	M30	58	45	46	8	455

Base Elements
Clamp Units
Clamping Parts
Machine Vises
Drilling Vises
Vibration Isolation
Surface Plates and Measurement Instruments
Index

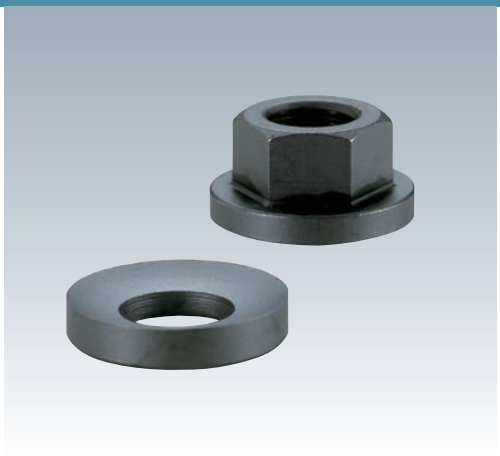

RoHS Compliant

ERON

No.E-425

Spherical Flanged Nuts

Material S45C Heat Treatment HRC30 ± 5 heat treatment
Surface Treatment Blackened

- Provides consistently stable clamping without affecting the parallelism of the workpiece, bolt, etc.
- Comes as a set with self-aligning washers.

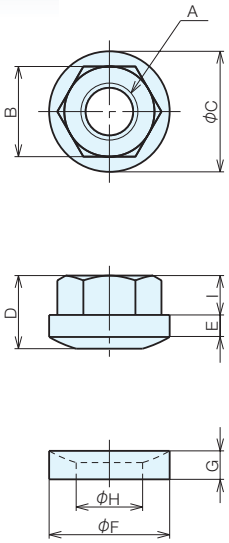

Specifications

Order No.	No.	A (Coarse Thread)	B	C	D	E	F	G	H	I	Weight (g)
03422	**SFNM08**	M8×1.25	13	19	12	3	19	4	10	7.8	21
03423	**SFNM10**	M10×1.5	17	22	13	3	22	5	12	8.4	32
03424	**SFNM12**	M12×1.75	19	25	14.3	4	25	6	14	9.0	46
03425	**SFNM14**	M14×2	22	28	17.5	4.5	28	6	16	11.4	66
03426	**SFNM16**	M16×2	24	35	20	4.5	35	7	18	12.8	103
03427	**SFNM18**	M18×2.5	27	35	20.6	4.5	35	7	20	13.6	106
03428	**SFNM20**	M20×2.5	30	42	25	6	42	8	22	16.6	183
03429	**SFNM22**	M22×2.5	32	45	25.4	6	45	8	25.4	16.9	210
03430	**SFNM24**	M24×3	36	50	28	6	50	8	28	18.7	270

Usage Examples

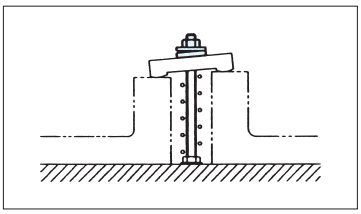

RoHS Compliant

ERON

No.E-404

Coupling Nuts

Material S45C Heat Treatment HRC30 ± 5 heat treatment

Surface Treatment Blackened

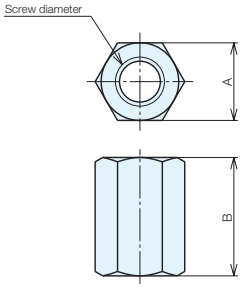

Specifications

Order No.	No.	Screw Diameter (Coarse Thread)	A	B	Weight (g)
01112	CNM0008	M8×1.25	13	22	17
02675	CNM0010	M10×1.5	17	25	40
02676	CNM0012	M12×1.75	19	29	48
02677	CNM0014	M14×2	22	32	75
02678	CNM0016	M16×2	24	36	90
02679	CNM0018	M18×2.5	27	41	130
02680	CNM0020	M20×2.5	30	44	175
02681	CNM0022	M22×2.5	32	48	210
02682	CNM0024	M24×3	36	57	340
95975	CNM0030	M30	46	70	693

Base Elements
Clamp Units
Clamping Parts
Machine Vises
Drilling Vises
Vibration Isolation
Surface Plates and Measurement Instruments
Index

RoHS Compliant

ERON

No.E-404

Coupling Nuts (Type Long)

Material S45C Heat Treatment HRC30 ± 5 heat treatment

Surface Treatment Blackened

- Does not come loose easily thanks to the long screw part.
- The B dimension is set to 3 times the screw diameter.

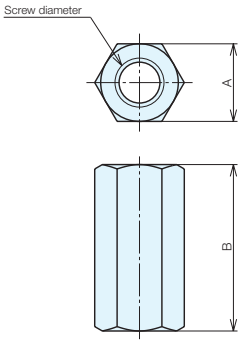

Usage Examples

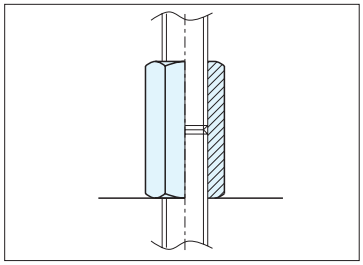

Specifications

Order No.	No.	Screw Diameter (Coarse Thread)	A	B	Weight (g)
51944	CNL016	M16×2	24	48	120
51945	CNL020	M20×2.5	30	60	240
51946	CNL022	M22×2.5	32	66	280
51947	CNL024	M24×3	36	72	400

RoHS Compliant

ERON

No.E-418

Flat Washers

Material SUM22 Heat Treatment HRC30 ± 5 heat treatment
Surface Treatment Blackened

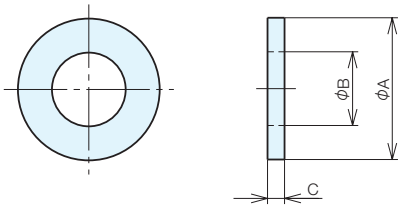

Specifications

Order No.	No.	Compatible Bolts	A	B	C	Weight (g)
50581	**WF 4**	M4	12	4.5	2	2
50582	**WF 6**	M6	16	7	2.5	3
19567	**WF 8**	M8	19	9	3	5
03288	**WF10**	M10	22	11	3	7
03289	**WF12**	M12	25	13	3	8
03290	**WF14**	M14	28	15	3	11
03291	**WF16**	M16	35	17	3	18
03292	**WF18**	M18	38	19	3.5	23
03293	**WF20**	M20	42	21	4	30
03294	**WF22**	M22	44	23	4	34
03295	**WF24**	M24	50	27	5	56

Reference Pages

Flat washers (thick washers)

Base Elements
Clamp Units
Clamping Parts
Machine Vises
Drilling Vises
Vibration Isolation
Surface Plates and Measurement Instruments
Index

RoHS Compliant

ERON®

No.E-426

Self-Aligning Washers

Material SUM22 Heat Treatment HRC30 ± 5 heat treatment
Surface Treatment Blackened

- Provides consistently stable clamping without affecting the parallelism of the workpiece, bolt, etc.
- Comes as a matching set.

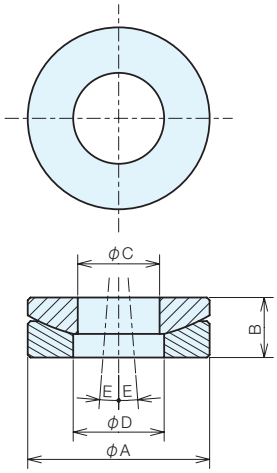

Specifications

Order No.	No.	Compatible Bolts	A	B	C	D	E	Weight (g)
03431	**SW 8M**	M8	19	6.2	9	10	3°	13
03432	**SW10M**	M10	22	8	11	12	3°	19
03433	**SW12M**	M12	25	8	13	14	2°	24
03434	**SW14M**	M14	28	9	15	16	2°	33
03435	**SW16M**	M16	35	10	17	18	2°	58
03436	**SW18M**	M18	35	10	19	20	2°	50
03437	**SW20M**	M20	42	12	21	22	1.5°	87
03438	**SW22M**	M22	45	11	24	25	2°	110
03439	**SW24M**	M24	50	12.7	27	28	3°	150

Base Elements
Clamp Units
Clamping Parts
Machine Vises
Drilling Vises
Vibration Isolation
Surface Plates and Measurement Instruments
Index

RoHS Compliant

ERON®

No.E-402

T-Slot Nuts

Material S45C Heat Treatment HRC30 ± 5 heat treatment
Surface Treatment Blackened

- Has specifications where the bolt cannot pass through in order to prevent damaging the T-slot by the bolt protruding.

Reference Pages

T-slot nut (SUS)

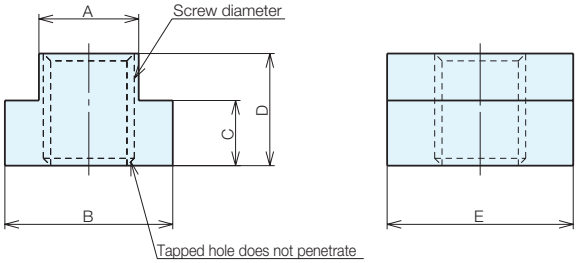

Specifications

Order No.	No.	Compatible T-slot Width	Screw Diameter (Coarse Thread)	A ± 0.3	B	C	D	E	Weight (g)
113056	TNM1006	10	M6×1.0	9	14.3	6.4	12.7	22	23
01108	TNM1008	10	M8×1.25	9	14.3	6.4	12.7	22	23
113057	TNM1208	12	M8×1.25	11.5	17.5	6.4	12.7	22	28
02571	TNM1210	12	M10×1.5	11.5	17.5	6.4	12.7	22	27
02572	TNM1410	14	M10×1.5	13.5	22.2	8.5	15.8	29	55
02581	TNM1412	14	M12×1.75	13.5	22.2	8.5	15.8	29	51
02630	TNM1612	16	M12×1.75	15.3	25.4	8.5	15.8	29	63
02631	TNM1614	16	M14×2	15.3	25.4	8.5	15.8	29	59
113058	TNM1810	18	M10×1.5	17	28.6	11.1	19.1	32	105
15817	TNM1812	18	M12×1.75	17	28.6	11.1	19.1	32	102
02632	TNM1814	18	M14×2	17	28.6	11.1	19.1	32	96
02633	TNM1816	18	M16×2	17	28.6	11.1	19.1	32	89
02634	TNM2016	20	M16×2	19.5	31.8	11.9	19.1	32	108
02635	TNM2018	20	M18×2.5	19.5	31.8	11.9	19.1	32	100
25179	TNM2216	22	M16×2	21.5	36	14.2	25.4	38	193
02636	TNM2218	22	M18×2.5	21.5	36	14.2	25.4	38	182
02637	TNM2220	22	M20×2.5	21.5	36	14.2	25.4	38	171
25551	TNM2416	24	M16×2	23.5	38.2	14.2	25.4	38	214
02638	TNM2418	24	M18×2.5	23.5	38.2	14.2	25.4	38	203
02639	TNM2420	24	M20×2.5	23.5	38.2	14.2	25.4	38	192
02640	TNM2620	26	M20×2.5	24.9	41.3	15.8	25.4	45	263
02641	TNM2622	26	M22×2.5	24.9	41.3	15.8	25.4	45	250
32558	TNM2816	28	M16×2	26.5	41.3	17.5	28.6	51	378
39331	TNM2820	28	M20×2.5	26.5	41.3	17.5	28.6	51	353
02642	TNM2822	28	M22×2.5	26.5	41.3	17.5	28.6	51	338
02643	TNM2824	28	M24×3	26.5	41.3	17.5	28.6	51	326
03330	TNM3224	32	M24×3	31.3	47.6	19.1	31.8	54	450
03331	TNM3227	32	M27×3	31.3	47.6	19.1	31.8	54	420
03332	TNM3630	36	M30×3.5	35.5	50	22.2	44.5	64	750
03333	TNM4236	42	M36×4	40	62	27	52	72	1150

Base Elements
Clamp Units
Clamping Parts
Machine Vises
Drilling Vises
Vibration Isolation
Surface Plates and Measurement Instruments
Index

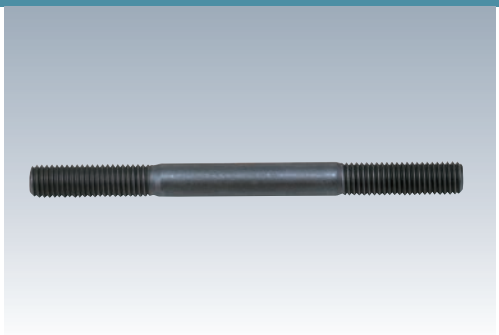

RoHS Compliant

ERON®

No.E-400

Stud Bolts

Material S45C Heat Treatment HRC30 ± 5 heat treatment
Surface Treatment Blackened

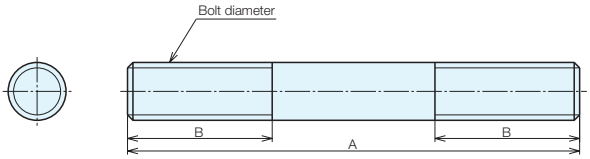

Specifications

Order No.	No.	Screw Diameter (Coarse Thread)	A	B	Weight (g)		
01117	BM00850	M8×1.25	50	22	20		
02711	BM00875	M8×1.25	75	30	30		
02712	BM08100	M8×1.25	100	40	40		
00036	BM08125	M8×1.25	125	40	50		
02713	BM08150	M8×1.25	150	40	60		
02714	BM08175	M8×1.25	175	40	70		
02715	BM08200	M8×1.25	200	40	80		
02716	BM01050	M10×1.5	50	22	31		
02717	BM01075	M10×1.5	75	30	47		
02718	BM10100	M10×1.5	100	40	63		
02719	BM10125	M10×1.5	125	40	78		
02720	BM10150	M10×1.5	150	40	94		
02721	BM10175	M10×1.5	175	40	109		
02722	BM10200	M10×1.5	200	40	125		
02723	BM01250	M12×1.75	50	22	35		
02724	BM01275	M12×1.75	75	30	55		
02725	BM12100	M12×1.75	100	40	70		
02726	BM12125	M12×1.75	125	40	95		
02727	BM12150	M12×1.75	150	40	115		
02728	BM12175	M12×1.75	175	40	140		
02729	BM12200	M12×1.75	200	40	160		
16420	BM12225	M12×1.75	225	60	180		
16421	BM12250	M12×1.75	250	60	200		
16422	BM12300	M12×1.75	300	60	240		
16423	BM12350	M12×1.75	350	60	285		
16424	BM12400	M12×1.75	400	60	330		
16425	BM12450	M12×1.75	450	60	375		
16426	BM12500	M12×1.75	500	60	420		
02730	BM01450	M14×2	50	22	61		
02731	BM01475	M14×2	75	30	92		
02732	BM14100	M14×2	100	40	123		
02733	BM14125	M14×2	125	40	153		
00120	BM14150	M14×2	150	40	184		
02734	BM14175	M14×2	175	40	215		
02735	BM14200	M14×2	200	40	246		
02736	BM14225	M14×2	225	60	276		
02737	BM14250	M14×2	250	60	367		
02738	BM14300	M14×2	300	60	369		
02739	BM14350	M14×2	350	60	430		
02740	BM14400	M14×2	400	60	492		
02741	BM01675	M16×2	75	30	120		
02742	BM16100	M16×2	100	40	160		
02743	BM16125	M16×2	125	40	200		
02744	BM16150	M16×2	150	40	241		
02745	BM16175	M16×2	175	40	281		
02746	BM16200	M16×2	200	40	321		
02747	BM16225	M16×2	225	60	361		
02748	BM16250	M16×2	250	60	401		

Base Elements
Clamp Units
Clamping Parts
Machine Vises
Drilling Vises
Vibration Isolation
Surface Plates and Measurement Instruments
Index

Specifications

Order No.	No.	Screw Diameter (Coarse Thread)	A	B	Weight (g)		
02749	BM16300	M16×2	300	60	482		
02750	BM16350	M16×2	350	60	562		
02751	BM16400	M16×2	400	60	643		
02752	BM16450	M16×2	450	60	723		
02753	BM16500	M16×2	500	60	803		
02754	BM01875	M18×2.5	75	30	152		
02755	BM18100	M18×2.5	100	40	203		
02756	BM18125	M18×2.5	125	40	254		
02757	BM18150	M18×2.5	150	40	305		
02758	BM18175	M18×2.5	175	40	356		
02759	BM18200	M18×2.5	200	40	406		
02760	BM18225	M18×2.5	225	60	457		
02761	BM18250	M18×2.5	250	60	508		
02762	BM18300	M18×2.5	300	60	610		
02763	BM18350	M18×2.5	350	60	712		
02764	BM18400	M18×2.5	400	60	813		
02765	BM18450	M18×2.5	450	60	915		
02766	BM18500	M18×2.5	500	60	1017		
02767	BM02075	M20×2.5	75	30	188		
02768	BM20100	M20×2.5	100	40	251		
02769	BM20125	M20×2.5	125	40	314		
02770	BM20150	M20×2.5	150	40	376		
02771	BM20175	M20×2.5	175	40	439		
02772	BM20200	M20×2.5	200	40	502		
02773	BM20225	M20×2.5	225	60	565		
02774	BM20250	M20×2.5	250	60	628		
02775	BM20300	M20×2.5	300	60	753		
02776	BM20350	M20×2.5	350	60	879		
02777	BM20400	M20×2.5	400	60	1004		
02778	BM20450	M20×2.5	450	60	1130		
02779	BM20500	M20×2.5	500	60	1256		
02780	BM02275	M22×2.5	75	30	227		
02781	BM22100	M22×2.5	100	40	303		
02782	BM22125	M22×2.5	125	40	379		
02783	BM22150	M22×2.5	150	40	455		
02784	BM22175	M22×2.5	175	40	531		
02785	BM22200	M22×2.5	200	40	607		
02786	BM22250	M22×2.5	250	60	759		
02787	BM22300	M22×2.5	300	60	911		
02788	BM22350	M22×2.5	350	60	1063		
02789	BM22400	M22×2.5	400	60	1215		
02790	BM22450	M22×2.5	450	60	1367		
02791	BM22500	M22×2.5	500	60	1519		
02792	BM02475	M24×3	75	30	271		
02793	BM24100	M24×3	100	40	361		
02794	BM24125	M24×3	125	40	452		
02795	BM24150	M24×3	150	40	542		
02796	BM24175	M24×3	175	40	633		
02797	BM24200	M24×3	200	40	723		
02798	BM24250	M24×3	250	60	904		
02799	BM24300	M24×3	300	60	1085		
02800	BM24350	M24×3	350	60	1266		
02801	BM24400	M24×3	400	60	1446		
00111	BM24450	M24×3	450	60	1627		
02802	BM24500	M24×3	500	60	1808		
95949	BM30200	M30×3.5	200	50	1100		
95950	BM30250	M30×3.5	250	50	1380		
95951	BM30300	M30×3.5	300	50	1650		
95952	BM30350	M30×3.5	350	50	1930		
95953	BM30400	M30×3.5	400	50	2200		
95954	BM30450	M30×3.5	450	50	2480		

Specifications

Order No.	No.	Screw Diameter (Coarse Thread)	A	B	Weight (g)		
95955	**BM30500**	M30×3.5	500	50	2760		
95956	**BM30550**	M30×3.5	550	50	3030		
95957	**BM30600**	M30×3.5	600	50	3310		
95958	**BM30650**	M30×3.5	650	50	3580		
95959	**BM30700**	M30×3.5	700	50	3860		
95960	**BM30750**	M30×3.5	750	50	4130		
95961	**BM30800**	M30×3.5	800	50	4410		
95962	**BM30850**	M30×3.5	850	50	4680		
95963	**BM30900**	M30×3.5	900	50	4960		
95964	**BM30950**	M30×3.5	950	50	5240		
95965	**BM301000**	M30×3.5	1000	50	5510		

Base Elements
Clamp Units
Clamping Parts
Machine Vises
Drilling Vises
Vibration Isolation
Surface Plates and Measurement Instruments
Index

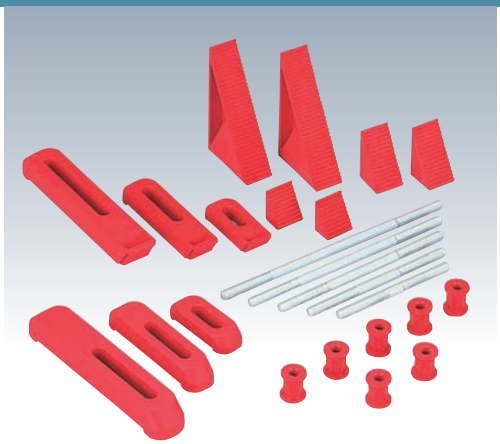

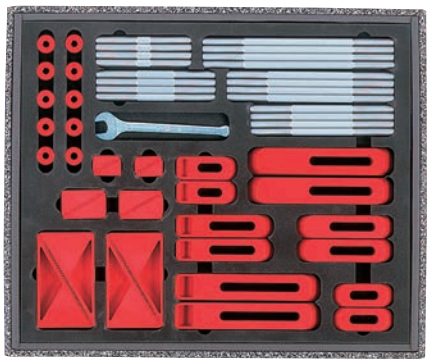

RoHS Compliant

ERON®

No.E-472

Pla Clamping Kits

- World's first engineering plastic (PBT resin) clamping set.
- The material used offers excellent strength and rigidity, and has the highest level elasticity among engineering plastics.
- Lightweight at 1/10 of steel. Easy to carry and able to reduce set-up time.
- Does not rust, making it ideal for clamping in locations and for workpieces where rust is a problem, and allowing it to be used while constantly clean.
- Capable of soft clamping without scratching the workpiece. Useful for clamping of soft materials and finished products.
- Ideal for clamping the item to be measured such as with a coordinate measuring machine and will not damage tables or workpieces or cause injuries if dropped.
- Can also be used as a clamp for electrical discharge machines. Can be used with both synthetic and mineral machining liquids.
- Can also be used as a clamp for light work such as engraving.
- Employs aluminum (A5056) stud bolts for increased strength and rigidity. Rust resistant with alumite treatment.
- Innovative design that gives full consideration to functionality.

Content of Set

Step Blocks
28.8H, 45.3H, 94.8H
4 pieces of each
(Engineering plastic)

Step Clamps
63.5L, 101.6L, 152.4L
2 pieces of each
(Engineering plastic)

Plain clamp
63.5L, 101.6L, 152.4L
2 pieces of each
(Engineering plastic)

Stud Bolts
M8 × 100, 125, 150, 175, 200
4 pieces of each
(Aluminum A5056 with alumite surface treatment)

Double Flanged Nuts
10 pieces of M8
(Engineering plastic)

1993
Designated as Ministry of International Trade and Industry Good Design Product

Specifications

Order No.	No.	Matching Screw Diameter (Coarse Thread)	Weight (kg)	
29997	**PCS0008**	M8×1.25	1.7	

Characteristics of Plastic Used

Property	Specific Gravity	Water Absorption Ratio	Heat Distortion Temperature	Thermal Conductivity	Linear Expansion Coefficient	Fire Resistance
Units	-	%	℃	cal/(cm·s·℃)	1℃	UL 94 standard
Conditions	23℃	20℃ for 30 days	18.6kg/cm	-	−30℃-+30℃	1.6 mm Bar
Data	1.41	0.35	208	4.0×10^{-4}	$3\text{-}8\times10^{-5}$	HB

Property	Tensile Strength Yield Point	Tensile Rupture Point	Bending Strength	Bending Elasticity	Izod Impact Strength	Insulation Breakdown Strength	Arc Resistance
Units	N/mm²	%	N/mm²	N/mm²	kJ/m²	kv/m	sec
Conditions	23℃	23℃	23℃	23℃	1/8" × 1/2" 23℃ bar with notch	D149	D495
Data	97	4-6	170	5200	650	Short time method 20 Step method 15	125

Usage Examples

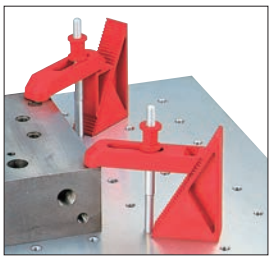

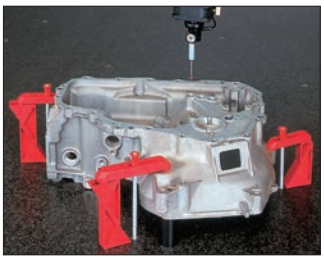

Base Elements
Clamp Units
Clamping Parts
Machine Vises
Drilling Vises
Vibration Isolation
Surface Plates and Measurement Instruments
Index

RoHS Compliant

ERON®

No.E-467

Pla Step Blocks

Material Engineering plastic (PBT resin)

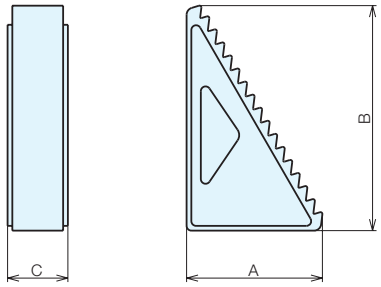

Specifications

Order No.	No.	A	B	C	Weight (g)	
29982	**PSB-1**	17.4	28.8	25.4	9	
29983	**PSB-2**	27.4	45.3	25.4	12	
29984	**PSB-3**	57.2	97.75	25.4	48	

RoHS Compliant

ERON®

No.E-468

Pla Step Clamps

Material Engineering plastic (PBT resin)

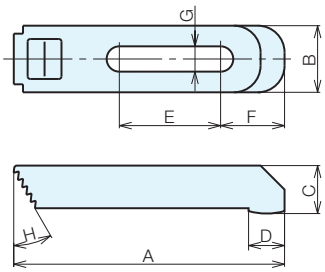

Specifications

Order No.	No.	A	B	C	D	E	F	G	H	Weight (g)	
29985	**PSC-1**	63.5	25	13.5	11	16	20.5	9.5	30	12	
29986	**PSC-2**	101.6	25	18	13.5	38	24	9.5	30	29	
29987	**PSC-3**	152.4	29	21.5	16.6	73	27	9.5	30	50	

RoHS Compliant

ERON®

No.E-469

Pla Plain Clamps

Material Engineering plastic (PBT resin)

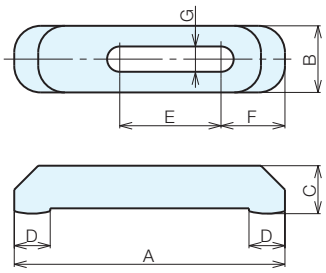

Specifications

Order No.	No.	A	B	C	D	E	F	G	Weight (g)	
29988	**PPC-1**	63.5	25	13.5	11	20.5	20.5	9.5	15	
29989	**PPC-2**	101.6	25	18	13.5	38	24	9.5	30	
29990	**PPC-3**	152.4	29	21.5	16.7	56	27	9.5	53	

Base Elements
Clamp Units
Clamping Parts
Machine Vises
Drilling Vises
Vibration Isolation
Surface Plates and Measurement Instruments
Index

RoHS Compliant

ERON®

No.E-471

Pla Double Flanged Nuts

Material Engineering plastic (PBT resin)

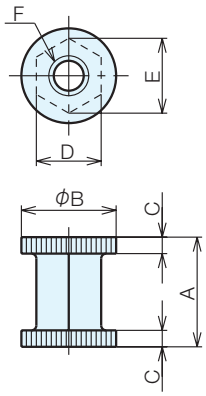

Specifications

Order No.	No.	A	B	C	D	E	F	Weight (g)
29996	**PNM08**	22	19	3.3	13	15	M8	5

RoHS Compliant

ERON®

No.E-470

Aluminum Stud Bolts

Material A5056-H34 Surface Treatment Alumite treatment

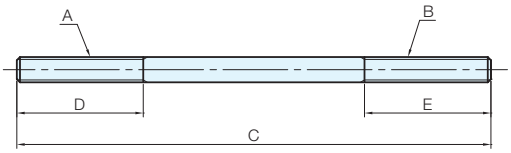

Specifications

Order No.	No.	A	B	C	D	E	Weight (g)
35724	**ABM08-06×100**	M8	M 6	100	40	10	13
35725	**ABM08-06×125**	M8	M 6	125	40	10	16
35726	**ABM08-06×150**	M8	M 6	150	40	10	20
35727	**ABM08-06×175**	M8	M 6	175	40	10	23
35728	**ABM08-06×200**	M8	M 6	200	40	10	27
29991	**ABM08×100**	M8	M 8	100	40	40	14
29992	**ABM08×125**	M8	M 8	125	40	40	17
29993	**ABM08×150**	M8	M 8	150	40	40	20
29994	**ABM08×175**	M8	M 8	175	40	40	24
29995	**ABM08×200**	M8	M 8	200	40	40	27
34610	**ABM08-10×100**	M8	M10	100	40	20	15
34611	**ABM08-10×125**	M8	M10	125	40	20	18
34612	**ABM08-10×150**	M8	M10	150	40	20	22
34613	**ABM08-10×175**	M8	M10	175	40	20	25
34614	**ABM08-10×200**	M8	M10	200	40	20	29
34615	**ABM08-12×100**	M8	M12	100	40	25	18
34616	**ABM08-12×125**	M8	M12	125	40	25	21
34617	**ABM08-12×150**	M8	M12	150	40	25	25
34618	**ABM08-12×175**	M8	M12	175	40	25	28
34619	**ABM08-12×200**	M8	M12	200	40	25	32

Base Elements
Clamp Units
Clamping Parts
Machine Vises
Drilling Vises
Vibration Isolation
Surface Plates and Measurement Instruments
Index

Clamping Parts

What are Clamping Parts?

Clamping parts are components that make up "clamping tools". Clamping parts can be used for a wide variety of applications, including full tightening and temporally tightening of workpieces in free combinations, and fixing locating parts.

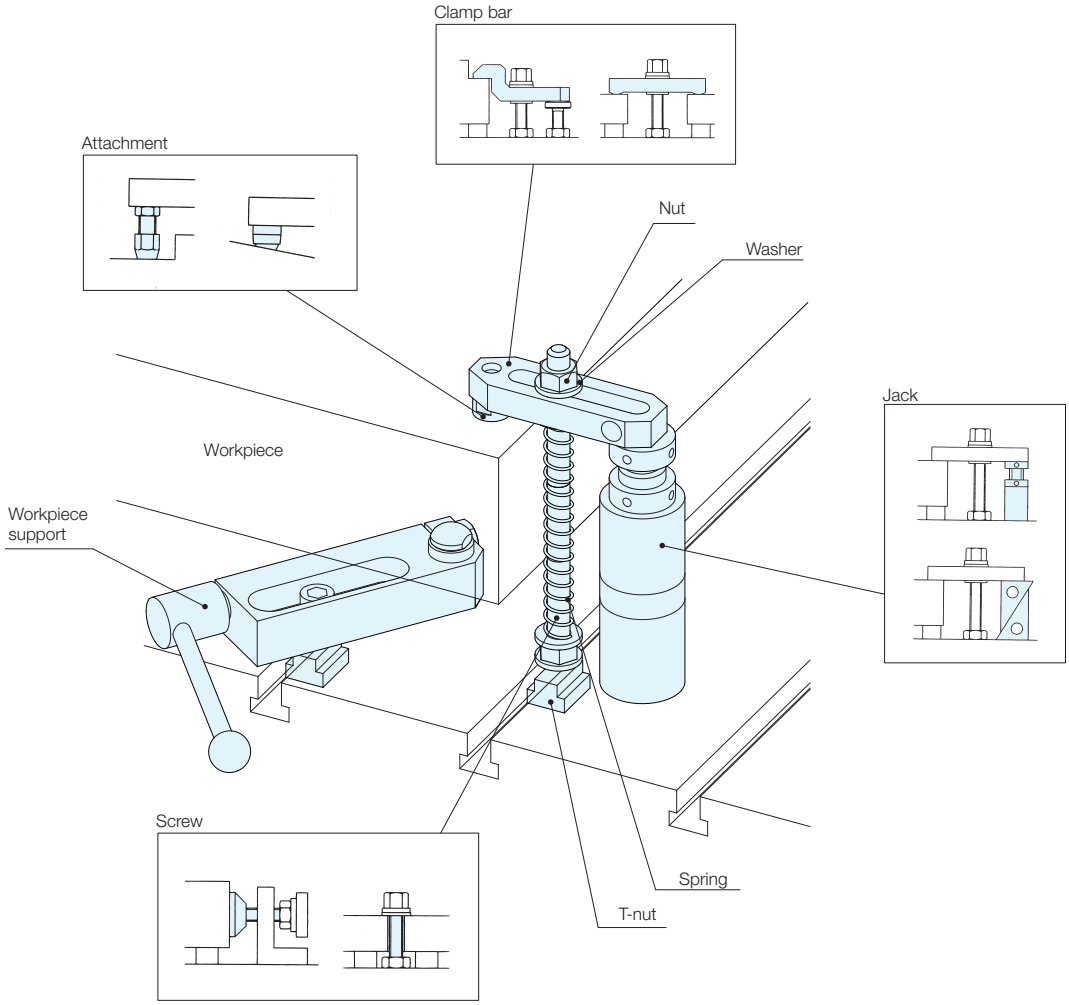

Base Elements
Clamp Units
Clamping Parts
Machine Vises
Drilling Vises
Vibration Isolation
Surface Plates and Measurement Instruments
Index

Nut

This is used for clamping or feeding the screw part.
Select the nut that matches your conditions.

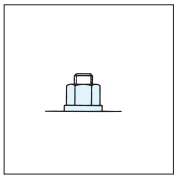
General tightening

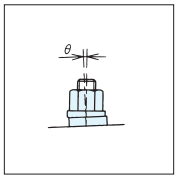

Tilted adsorption

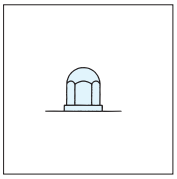
Preventing chips

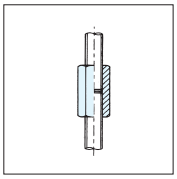
Joining

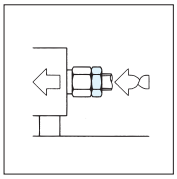
Preventing co-rotation

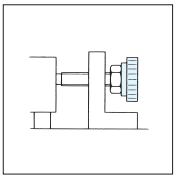
Knobs for feeding

Washers

In addition to protecting the attachment face, these can also be used to prevent tilting such as of springs.

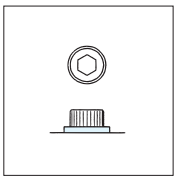
Increasing the contact surface

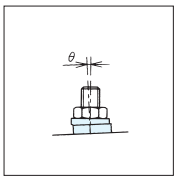

Tilted Adsorption

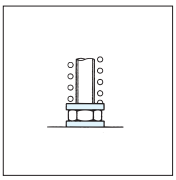
Spring tilted adsorption

Clamp Bars and Attachments for the Workpiece Surface Shape

There are a wide variety of shapes of parts for clamping workpieces.
The range of clamping can be expanded by selecting the clamp bar that matches the shapes or the attachments as needed for the clamp bar.

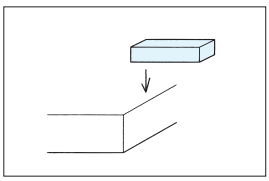

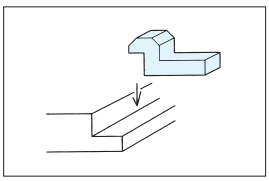

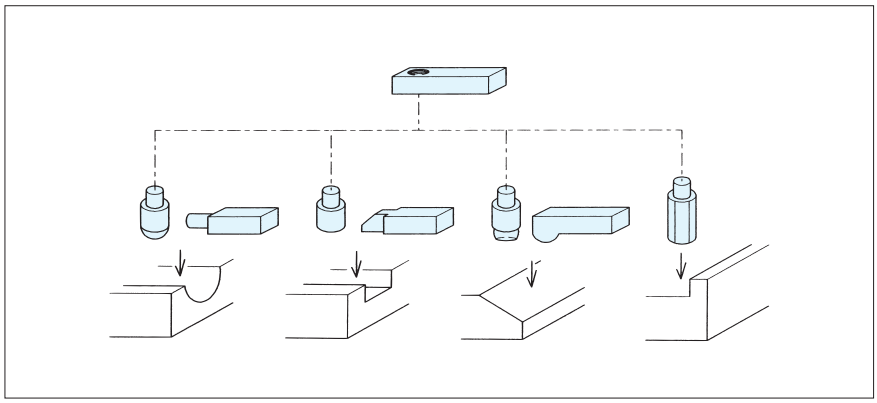

Attachments are selected based on the surface shape and surface roughness.
Attachments made of soft materials or that have been ground can be used for finished surfaces.
Attachments with a hard to slide shape need to be chosen for cast surfaces, etc.

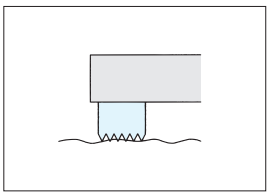

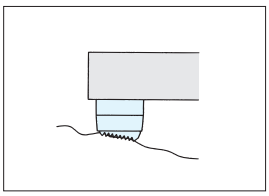

Base Elements
Clamp Units
Clamping Parts
Machine Vises
Drilling Vises
Vibration Isolation
Surface Plates and Measurement Instruments
Index

Clamping Parts

General clamps use adjustable supports that are suitable for the load such as jacks and step blocks.

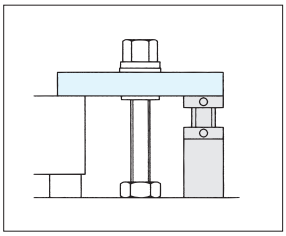

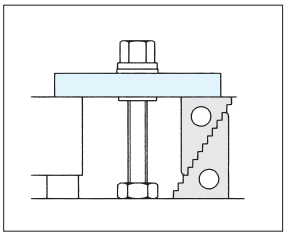

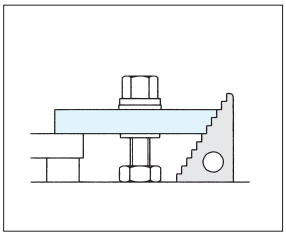

Furthermore, you can also select clamp bars that have tapped holes for supports or that have an integrated support (leg clamps) to suit your application.

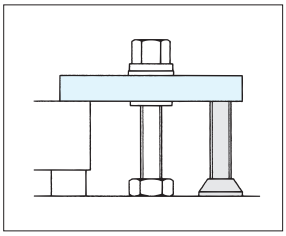

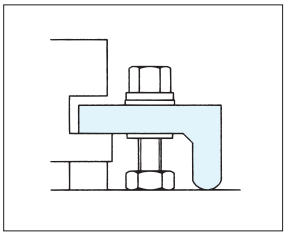

Base Elements
Clamp Units
Clamping Parts
Machine Vises
Drilling Vises
Vibration Isolation
Surface Plates and Measurement Instruments
Index

Screw Clamping Force

In order to obtain the desired clamping force, it is necessary to know the relationship between the screw torque and axial force. The appropriate clamping can be achieved by using the appropriate torque.
If the torque is too low, it can cause the screw to loosen.
Similarly, if the torque is too high, there is a risk of deforming or breaking component parts.
Care is required because variations in axial force occur due to small differences in friction, surface treatment, hardness, and other factors, even if the screw is the same size.
The following table shows a guide that you should check depending on your situation.

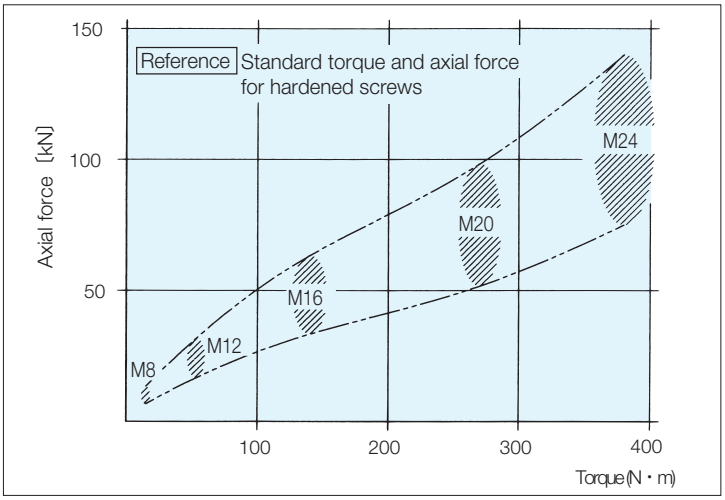

What is Torque?

Torque is expressed by the product of the length of the spanner with respect to the center of rotation of the screw and the force acting to rotate the spanner, and the axial force of the screw (the force pressing on the clamp bar) is determined by the magnitude of the torque.

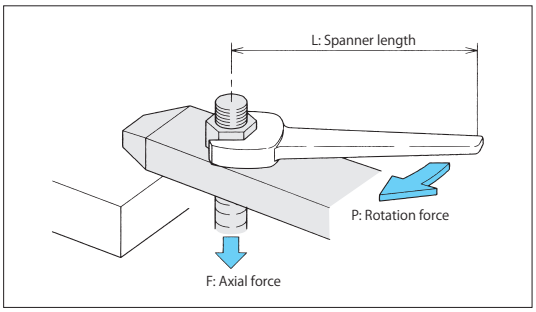

Example) What rotation force is required to tighten an M12 (hardened) bolt using a 30 cm (0.3 m) spanner?

Since Torque (T) = P·L, P = T/L

If we assume that the designated torque from the table on the previous page is 50 N·m, we get P = 50/0.3 ≈ 167 (N).

Furthermore, the axial force that is generated at this time is in the range of 1.5 to 3 tons.

Screw Clamping Force

The force applied to both ends of the clamp bar by the axial force that is generated by applying a torque to a screw can be calculated by the following formula.

F = fa+fb —— (1)

fa·a = fb·b —— (2)

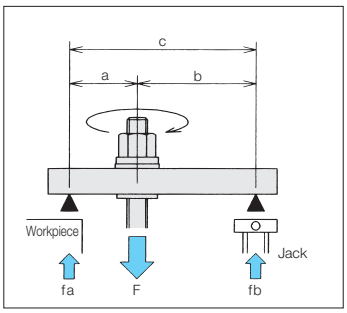

F (kN): Axial force of screw fa = F·b/(a+b)

a (cm): Distance between fastening point and clamp end

b (cm): Distance between fastening point and jack end

fa (kN): Force applied to the clamp end

fb (kN): Force applied to the jack

Example) F = 30 kN

a = 5 cm

For b = 10 cm

From Eq. (2)

fb = fa·a/b

Substituting into Eq. (1), the force acting on the clamp end is

fa = F·b/a+b

=30 × 10/15

= 20 (kN)

Furthermore, the force acting on the jack is

fb = F-fa

= 10(kN)

MEMO

Base Elements
Clamp Units
Clamping Parts
Machine Vises
Drilling Vises
Vibration Isolation
Surface Plates and Measurement Instruments
Index

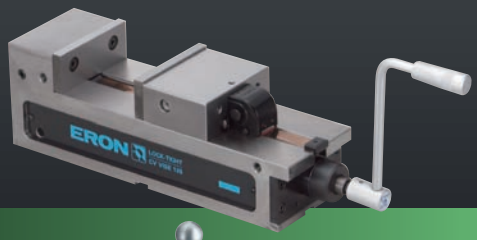

Machine Vises

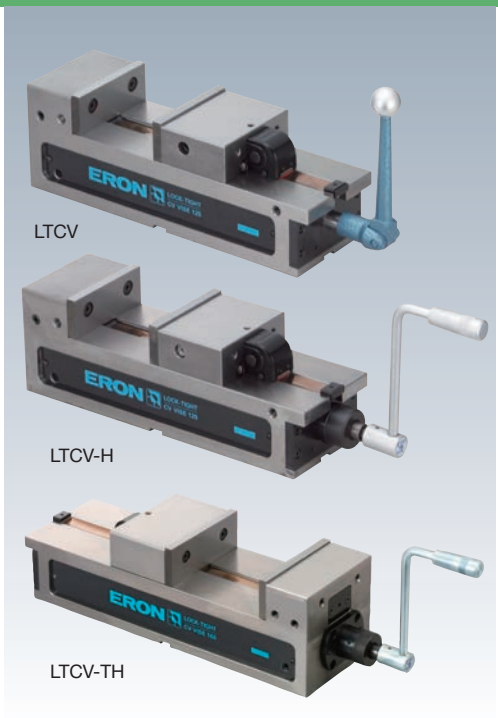

RoHS Compliant

ERON®

No.E-990

Lock-Tight CV Precision Machine Vises

Accessories Standard guide block (2 pieces per set) compatible T-slot width 18 mm ... 1 set
Standard clamping set (2 pieces per set) compatible T-slot width 18mm ... 2 sets
Handle ... 1 piece, Eyebolt for lifting up ... 1 set

- As long as the models are the same, all vises can be matched within 0.01mm or less in terms of height and distance from the guide key to the stationary jaw plate. (All vises have matched specifications as standard)
- Chips are prevented from entering into the main body by a retractable chip cover.
- The workpiece is prevented from lifting up by anti-floating mechanism.
- High accuracy that surpasses the former JISO standards.
- Sliding surfaces have been flame heat treated (HRC45) and offer excellent wear resistance.
- The main body is ductile, preventing bending and breakage during tightening.
- The main body and stationary jaw have a one piece construction that maintains high rigidity.
- The jaw opening is nearly double that of vises in the same class, allowing clamping of large workpieces.
- Has a large jaw depth, enabling secure clamping of tall workpieces.
- Fitted with a hydraulic compensation mechanism as an emergency measure when the clamping force drops.
- Coolant oil and fine chips that get into the main body can be taken away from blow holes easily.
- The mechanical type allows for operation by handle on the stationary jaw side, and the LTCV-TH allows for operation by handle on the stationary jaw side that has a hydraulic unit. Operation from the stationary jaw side reduces the workpiece desorption distance, shortens the set-up time, and reduces the load on the worker.
- In the SJ type (LTCV-S, SH), the jaw plates from the standard type (LTCV, LTCV-H) are replaced with step jaw plates.

▲Lock-tight anti-floating mechanism

▲Lock-tight full multi-jaw system

▲Lock-tight hydraulic mechanism

LTCV mechanical type

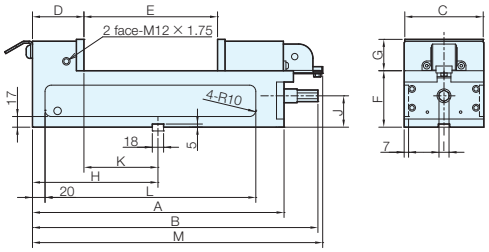

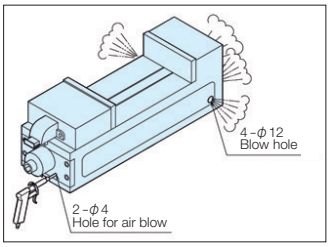

Air blow mechanism

LTCV-(S)H hydraulic type

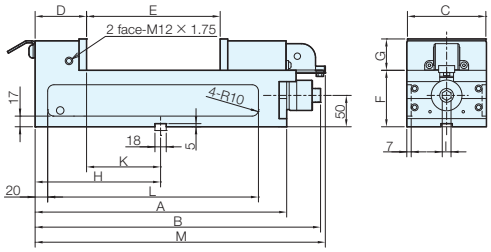

On the mechanical type, the handle can also be operated from the stationary jaw side.

LTCV-TH hydraulic type

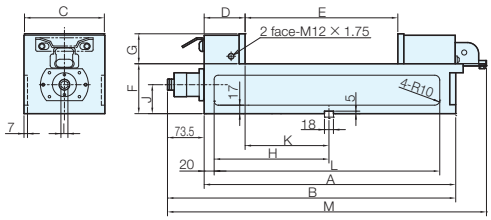

LTCV-S, SH SJ type

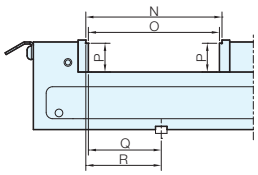

Base Elements
Clamp Units
Clamping Parts
Machine Vises
Drilling Vises
Vibration Isolation
Surface Plates and Measurement Instruments
Index

Size Chart

No.	A	B	C	D	E	F	G	H	I	J	K	L	M	N	O	P	Q	R
LTCV-100(S)	338	392	102	82	0-145	90	45	170	16	50	88	286	394.6	8-145	0-137	40	84	88
LTCV-125(S)	401	455	125	82	0-210	90	50	200	16	50	118	349	459.6	8-210	0-202	45	114	118
LTCV-160(S)	504	558	160	82	0-300	100	60	250	19	58	168	452	559.6	10-296	0-286	54	161	166
LTCV-200(S)	634	688	200	82	0-410	100	70	275	19	58	193	564	693.6	10-406	0-396	64	186	191
LTCV-100(S)H	338	393	102	82	0-145	90	45	170	14	50	88	286	394.6	8-145	0-137	40	84	88
LTCV-125(S)H	401	456	125	82	0-210	90	50	200	14	50	118	349	459.6	8-210	0-202	45	114	118
LTCV-160(S)H	504	559	160	82	0-300	100	60	250	14	58	168	452	559.6	10-296	0-286	54	161	166
LTCV-200(S)H	634	689	200	82	0-410	100	70	275	14	58	193	564	693.6	10-406	0-396	64	186	191
LTCV-160TH	504	559.5	160	82	0-300	100	60	250	14	58	168	452	633	-	-	-	-	-
LTCV-200TH	634	693.5	200	82	0-410	100	70	275	14	58	193	564	767	-	-	-	-	-

Specifications

Order No.	No.	Jaw Width	Jaw Depth	Maximum Jaw Opening	Standard Guide Block Width	Clamping Force (kN)	Weight (kg)
70115	**LTCV100**	102	45	145	18	30	20.5
70116	**LTCV125**	125	50	210	18	30	30
70117	**LTCV160**	160	60	300	18	30	50
80869	**LTCV200**	200	70	410	18	30	69
70118	**LTCV100H**	102	45	145	18	30	21
70119	**LTCV125H**	125	50	210	18	30	30
70120	**LTCV160H**	160	60	300	18	30	50
80870	**LTCV200H**	200	70	410	18	30	69
86025	**LTCV100S**	102	45	145	18	30	20.5
86026	**LTCV125S**	125	50	210	18	30	30
86027	**LTCV160S**	160	60	300	18	30	50
86028	**LTCV200S**	200	70	410	18	30	69
86029	**LTCV100SH**	102	45	145	18	30	21
86030	**LTCV125SH**	125	50	210	18	30	30
86031	**LTCV160SH**	160	60	300	18	30	50
86032	**LTCV200SH**	200	70	410	18	30	69
86033	**LTCV-160TH**	160	60	300	18	30	50
86034	**LTCV-200TH**	200	70	410	18	30	70

When ordering parallel products

A and B align within 0.01 no matter how many pieces

As long as they are the same size, all products are parallel no matter how many pieces. There is no charge for parallel products.

◆ When purchasing for the first time
Since all pieces are parallel as long as they are the same size, simply order the model number that you need.

◆ For additional orders
Since all pieces are parallel as long as they are the same size, simply order the same model number that you already have.

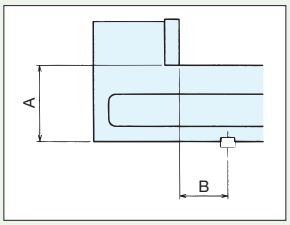

LTCV-S, SH parallel type

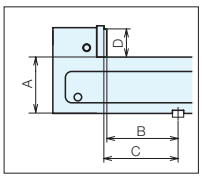

* For the SJ type, the parallel standards for matched specification products are as follows.
A: 0.01 or less
B, C, D: 0.02 or less

Accuracy Standards
(Static Accuracy)

No.	Inspection Points (per 100 mm)	Former JIS Standard (O Grade)	Nabeya Standard Value
1	Parallelism between bottom surface of main body and sliding surface	0.015	0.010
2	Perpendicularity between jaw plate and sliding surface	0.030	0.015
3	Perpendicularity between T-slot and jaw plate surface of stationary jaw side.	0.015	0.015
4	Parallelism between top surface of clamped test block and bottom surface of main body	0.020	0.015
5	Lift-up of top surface of clamped test block	0.030	0.015

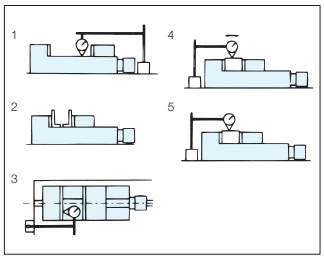

No.E-990

Handle Joint

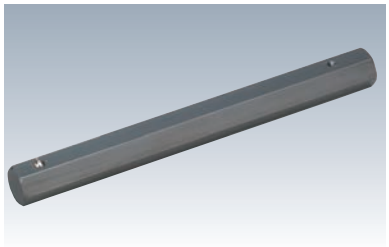

Handle Joint/Specifications

Compatible Models	Order No.	No.	Total Length	Side Length	
Common to all CV models	**84097**	**LTC-HJ150**	200	14	
Common to all CV models	**84098**	**LTC-HJ200**	250	14	
Common to all CV models	**84099**	**LTC-HJ250**	300	14	
Common to all CV models	**84100**	**LTC-HJ300**	350	14	
Common to all CV models	**84101**	**LTC-HJ350**	400	14	

Accessories

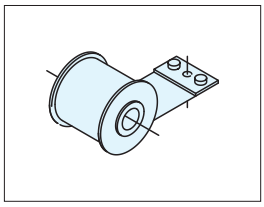

LTCV-FC chip cover for stationary jaw side

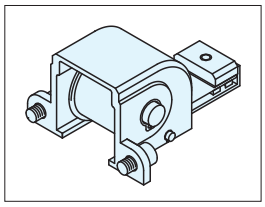

LTCV-RC chip cover unit for sliding jaw side

Chip Cover/Specifications

Compatible Models	Type	Order No.	No.	
Common to all CV models	For stationary jaw side	**78210**	**LTCV-FC**	
Common to all CV models	For sliding jaw side	**78211**	**LTCV-RC**	

Reference Pages

Guide block

P.136

Attachment clamp

P.135

Standard jaw plate JA

P.137

Step jaw plate SJ

P.137

Workstop

Handle

Parts Details - Mechanical Type

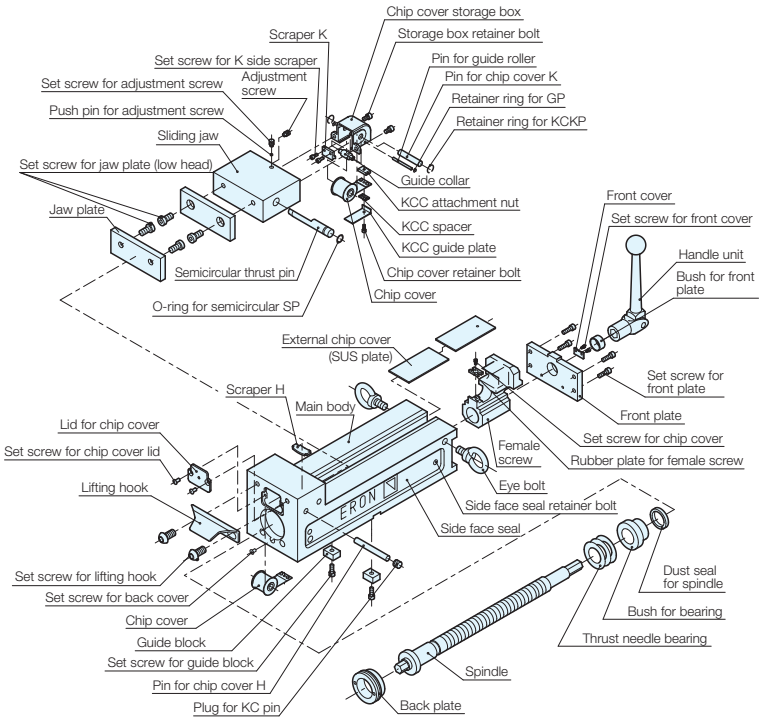

Base Elements
Clamp Units
Clamping Parts
Machine Vises
Drilling Vises
Vibration Isolation
Surface Plates and Measurement Instruments
Index

Parts Details - Hydraulic Type

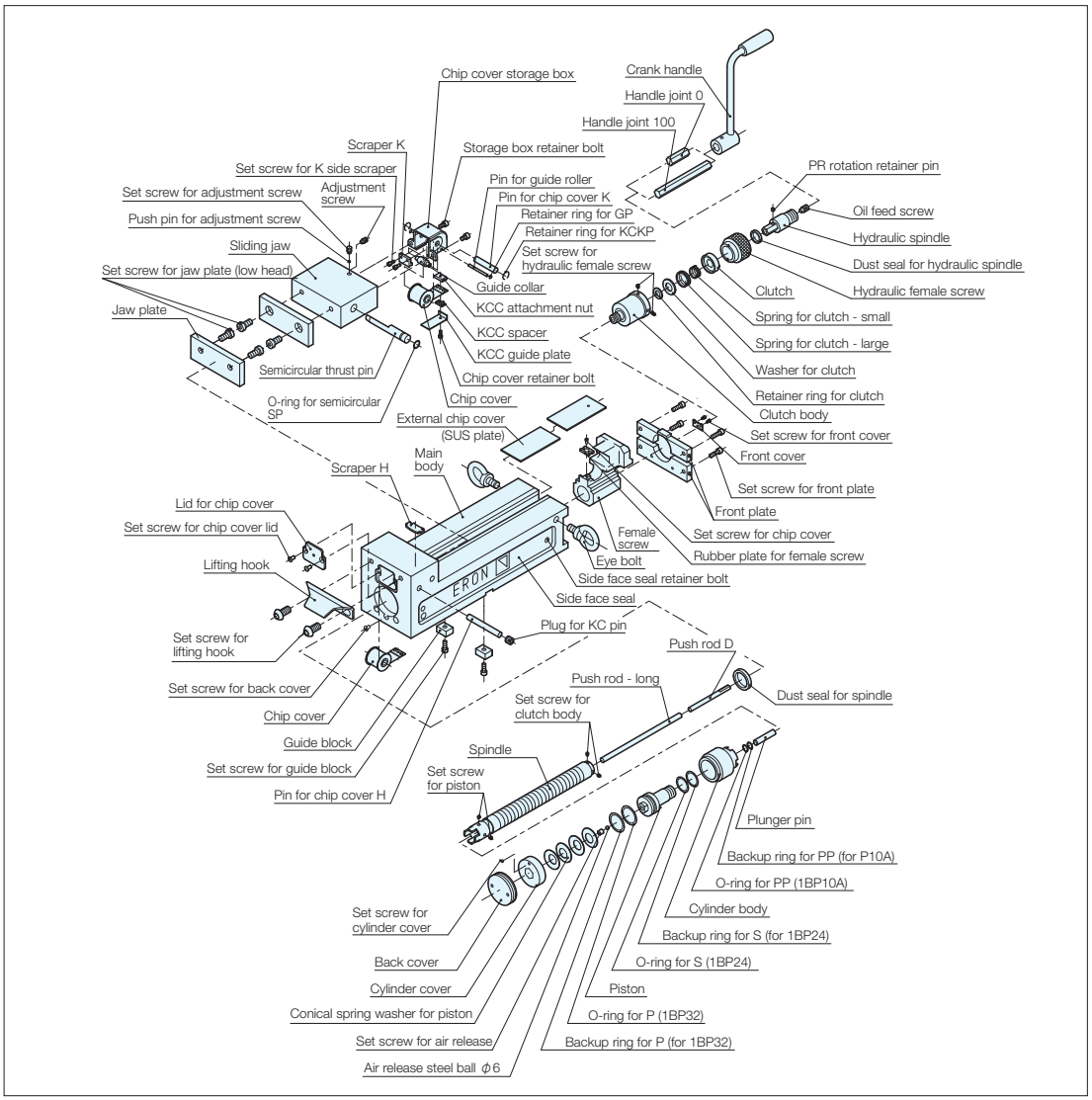

Structure Diagram - Hydraulic Type

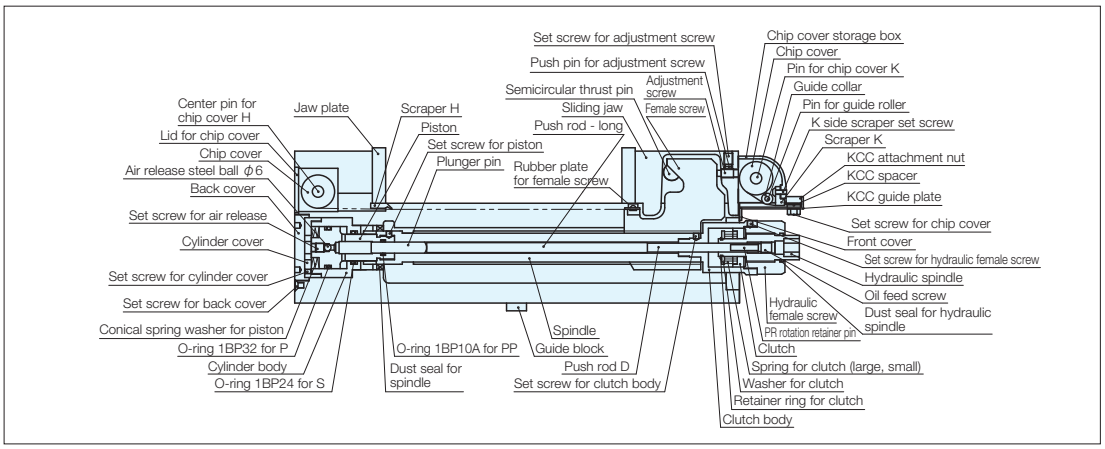

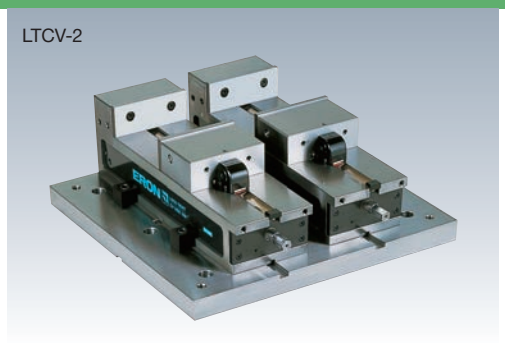

RoHS Compliant

ERON®

No.E-990T

Lock-Tight CV Precision Machine Vises - Multiple Jaw Vises

Accessories Guide block ... 2 pieces per set
Handle ... 1

- Useful for machining multiple workpieces of the same type, performing multiple machining processes, and machining long workpieces.
- Locating to machine tables can be easily performed using guide blocks.
- Can also be used as a single vise.

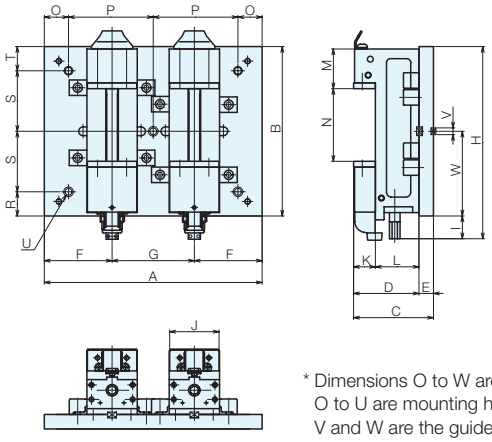

▲ Lock-tight anti-floating mechanism

* Dimensions O to W are user specification
O to U are mounting hole dimensions
V and W are the guide block width and position

Specifications

Order No.	No.	Used Vise	A	B	C	D	E	F	G	H	I	J	K	L	M	N	Weight (kg)
76493	LTCV100-2	LTCV100	450	350	165	135	30	140	170	397	47	102	45	90	82	0-145	79
76494	LTCV125-2	LTCV125	450	400	170	140	30	130	190	455	55	125	50	90	82	0-210	102
76495	LTCV160-2	LTCV160	600	550	200	160	40	195	210	558	8	160	60	100	82	0-300	204
86420	LTCV100H-2	LTCV100H	450	350	165	135	30	140	170	398	48	102	45	90	82	0-145	80
86423	LTCV125H-2	LTCV125H	450	400	170	140	30	130	190	456	56	125	50	90	82	0-210	102
86426	LTCV160H-2	LTCV160H	600	550	200	160	40	195	210	559	9	160	60	100	82	0-300	204

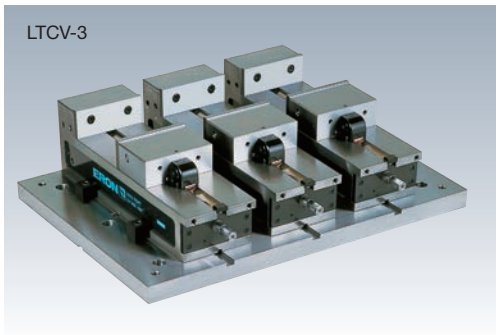

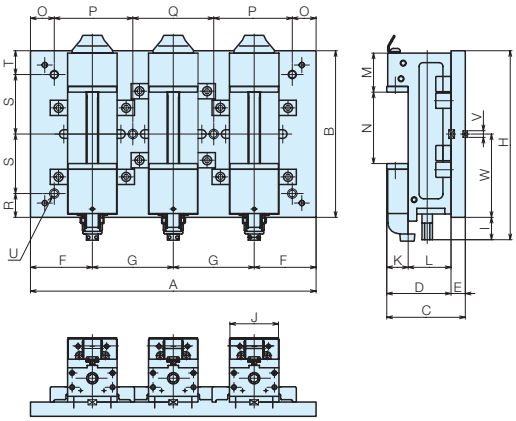

* Dimensions O to W are user specification
O to U are mounting hole dimensions
V and W are the guide block width and position

Specifications

Order No.	No.	Used Vise	A	B	C	D	E	F	G	H	I	J	K	L	M	N	Weight (kg)
76496	LTCV100-3	LTCV100	600	350	165	135	30	130	170	397	47	102	45	90	82	0-145	113
76497	LTCV125-3	LTCV125	650	400	170	140	30	135	190	455	55	125	50	90	82	0-210	146
76498	LTCV160-3	LTCV160	800	550	200	160	40	190	210	558	8	160	60	100	82	0-300	287
86421	LTCV100H-3	LTCV100H	600	350	165	135	30	130	170	398	48	102	45	90	82	0-145	114
86424	LTCV125H-3	LTCV125H	650	400	170	140	30	135	190	456	56	125	50	90	82	0-210	146
86427	LTCV160H-3	LTCV160H	800	550	200	160	40	190	210	559	9	160	60	100	82	0-300	287

Base Elements
Clamp Units
Clamping Parts
Machine Vises
Drilling Vises
Vibration Isolation
Surface Plates and Measurement Instruments
Index

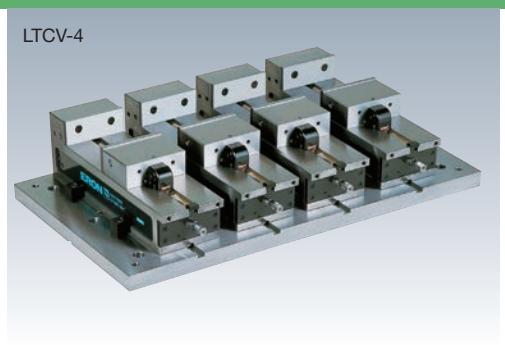

RoHS Compliant

ERON

No.E-990T

Lock-Tight CV Precision Machine Vises - Multiple Jaw Vises

Accessories Guide block ... 2 pieces per set
Handle ... 1 piece

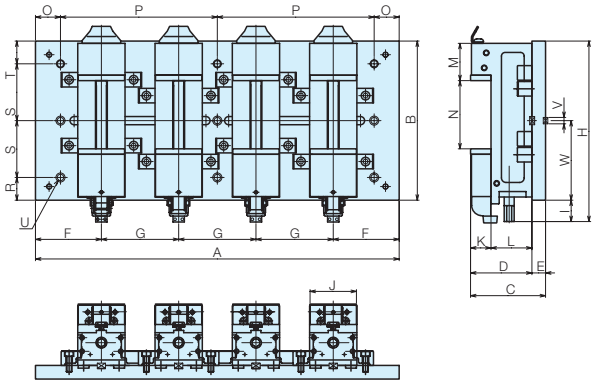

* Dimensions O to W are user specification
O to U are mounting hole dimensions
V and W are the guide block width and position

Specifications

Order No.	No.	Used Vise	A	B	C	D	E	F	G	H	I	J	K	L	M	N	Weight (kg)
76499	**LTCV100-4**	LTCV100	800	350	165	135	30	145	170	397	47	102	45	90	82	0-145	150
76500	**LTCV125-4**	LTCV125	900	400	170	140	30	165	190	455	55	125	50	90	82	0-210	206
76501	**LTCV160-4**	LTCV160	1000	550	200	160	40	185	210	558	8	160	60	100	82	0-300	372
86422	**LTCV100H-4**	LTCV100H	800	350	165	135	30	145	170	398	48	102	45	90	82	0-145	152
86425	**LTCV125H-4**	LTCV125H	900	400	170	140	30	165	190	456	56	125	50	90	82	0-210	206
86428	**LTCV160H-4**	LTCV160H	1000	550	200	160	40	185	210	559	9	160	60	100	82	0-300	372

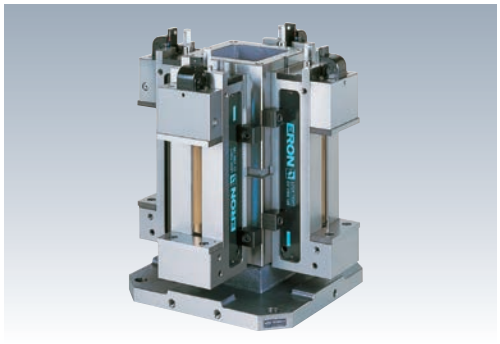

RoHS Compliant

ERON

No.E-990I

4 Faces/Lock-Tight CV Precision Machine Vises

- Optimal for use as the jig for horizontal machining centers.
- Combines an MC Tooling Block with 4 CV precision vises. This is our most general-purpose jig.

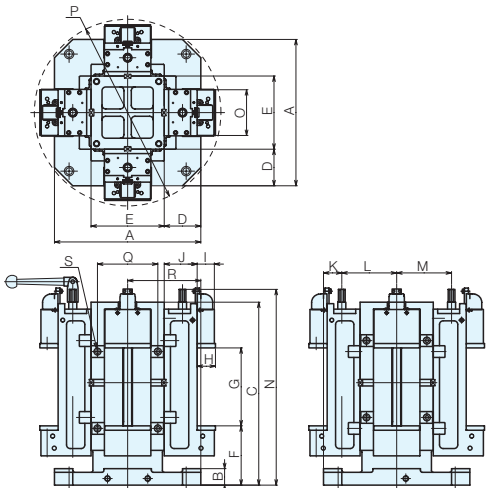

Specifications

Order No.	No.	Used Vise	A	B	C	D	E	F	G	H	I	J	K	L	M	N	O	P	Q	R	S Coarse Thread	Weight (kg)
76502	**LTCV125-400-4**	LTCV125	400	35	500	100	200	162	210	50	47	90	50	150	150	535	125	ϕ510	165	200	M16X2	240
76503	**LTCV160-500-4**	LTCV160	500	40	600	125	250	162	300	60	57	100	67	183	183	638	160	ϕ730	200	250	M16X2	385
76504	**LTCV160-630-4**	LTCV160	630	55	600	190	250	177	300	60	57	100	132	183	183	653	160	ϕ810	200	315	M16X2	435

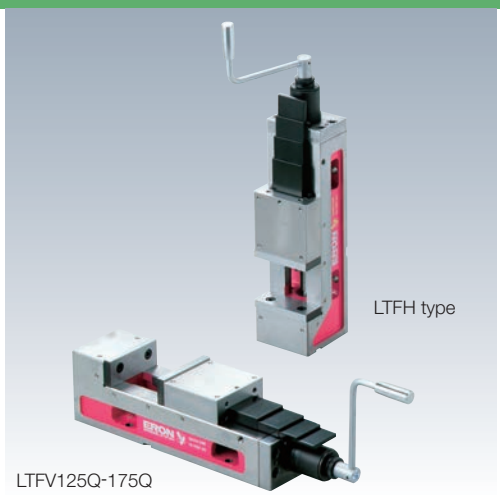

RoHS Compliant

ERON®

(Japan, Switzerland, Taiwan) No. E-775Q

Lock-tight FA Quick One Machine Vises

Accessories Standard clamping set (2 pieces per set) compatible T-slot width 18 mm ... 2 sets
Standard guide block (2 pieces per set) compatible groove width 18 mm ... 1 set
Handle ... 1 piece, eyebolt for lifting up ... 1 set

- Can be clamped easily and speedily with just one rotation using the newly developed mechanical pressure mechanism.
- The clamping force can be easily set simply by rotating the adjustment knob by hand.
- The mechanism is designed such that once the clamping force has been set, the vise will only operate at same clamping force, offering stable repeatable operations.
- Because of the mechanical pressure mechanism, the effect of temperature variations on the clamping force is small, and there is no need to replace consumables such as seals.
- The sliding jaw and workpiece are prevented from lifting up by an anti-floating mechanism.
- The main body is made of ductile cast iron, preventing bending and breakage during tightening.
- Sliding surfaces have been flame heat treated (HRC45) and offer excellent wear resistance.
- High accuracy that surpasses the former JIS standards 0 grade.
- Parallel accuracy of matched specification products is within 0.01.
- If the handle has interference with the machine table, use the handle joint (sold separately).
- The LTFH type can be used in all kinds of situations by attaching to an angle plate or mounting vertically for horizontal machining centers

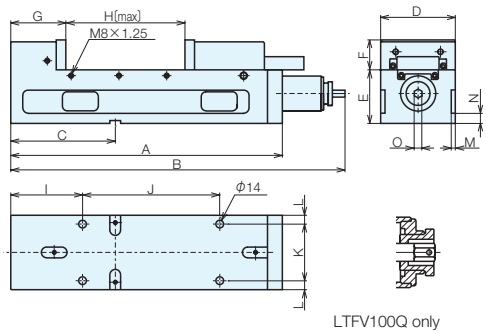

▲ Lock-tight anti-floating mechanism

▲ Lock-tight new multi-jaw system

▲ Lock-tight quick one mechanical pressure mechanism

Size Chart

No.	A	B	C	D	E	F	G	H	I	J	K	L	M	N	O
LTFV100Q	393	483.5	150	102	90	43	92	140	120	180	75	14.5	6.5	17	13
LTFV,LTFH125Q	455	560	175	125	90	50	92	200	120	230	95	16	7	17	13
LTFV,LTFH150Q	568	700	175	150	100	60	112	260	134	315	122	15	7	20	13
LTFV,LTFH175Q	609	741	175	175	115	70	115	280	140	350	145	16	7	20	13

LTFV Type Specifications

No.	Jaw Width	Jaw Depth	Jaw Opening	Standard Guide Block Width	Clamping force kN	Weight (kg)	LTFV-Q			LTFV-QG (Matched Specification)		
							Order No.	No.		Order No.	No.	
LTFV100Q	102	45	140	18	25	25.5	**62282**	**LTFV100Q**		**62283**	**LTFV100QG**	
LTFV125Q	125	50	200	18	30	35	**52058**	**LTFV125Q**		**52064**	**LTFV125QG**	
LTFV150Q	150	60	260	18	40	58	**52059**	**LTFV150Q**		**52065**	**LTFV150QG**	
LTFV175Q	175	70	280	18	40	79	**52060**	**LTFV175Q**		**52066**	**LTFV175QG**	

LTFH Type Specifications

No.	Jaw Width	Jaw Depth	Jaw Opening	Standard Guide Block Width	Clamping force kN	Weight (kg)	LTFH-Q			LTFH-QG (Matched Specification)		
							Order No.	No.		Order No.	No.	
LTFH125Q	123	50	200	18	30	35	**52061**	**LTFH125Q**		**52067**	**LTFH125QG**	
LTFH150Q	150	60	260	18	40	58	**52062**	**LTFH150Q**		**52068**	**LTFH150QG**	
LTFH175Q	175	70	280	18	40	79	**52063**	**LTFH175Q**		**52069**	**LTFH175QG**	

Handle Joint - Specifications

Order No.	No.	Effective Length	
62533	**LTQ- 80HJ**	80	
62534	**LTQ-200HJ**	200	

Accessories and Optional Parts (Refer to the Following Page)Reference Pages

Guide block
P.136 ▶

Attachment clamp
P.135 ▶

Standard jaw plate JA
P.137 ▶

Step jaw plate SJ
P.137 ▶

Handle

Base Elements
Clamp Units
Clamping Parts
Machine Vises
Drilling Vises
Vibration Isolation
Surface Plates and Measurement Instruments
Index

Parts Details

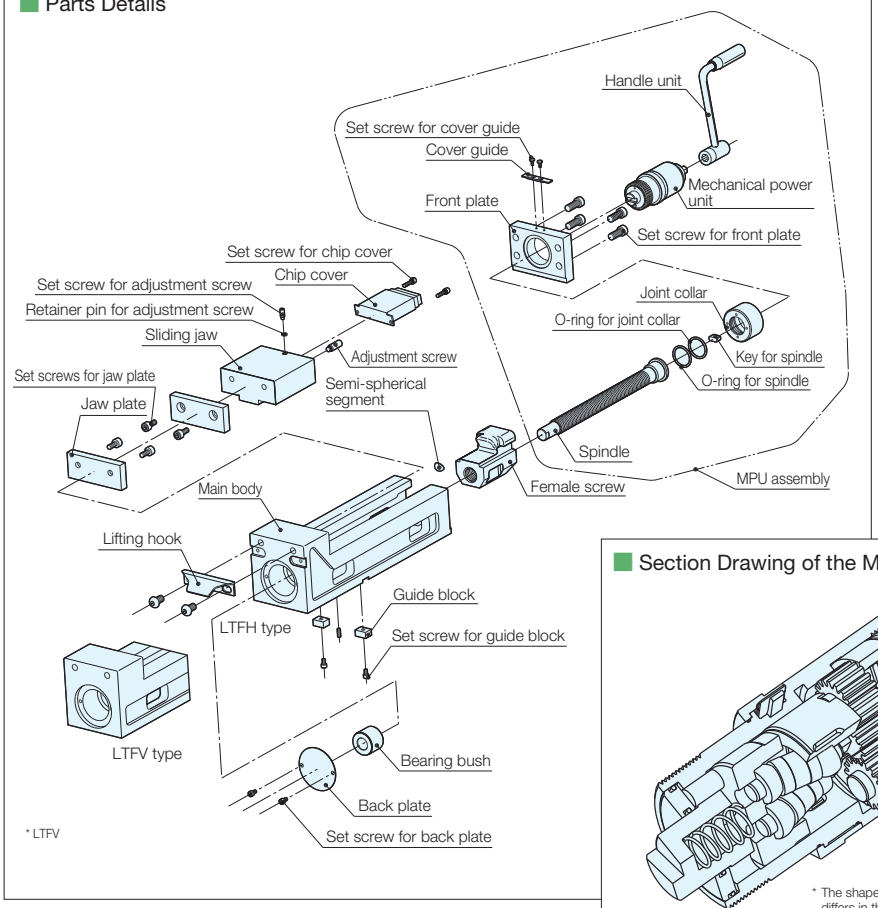

* LTFV

Section Drawing of the Mechanical Power Unit

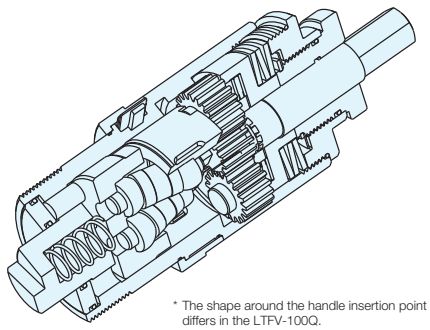

* The shape around the handle insertion point differs in the LTFV-100Q.

When ordering parallel products

(A and B align within 0.01 no matter how many pieces)
If the suffix of the manufacture no. (attached to the outer box and main body) is the same letter, then the products are parallel no matter how many pieces (for standard guide blocks). There is no charge for parallel products.

- ◆ When purchasing for the first time
  Order matched specification products (suffix G).
  When ordering, specify the groove width of the machine you are using.
- ◆ For additional orders
  Contact us with the suffix letter of the manufacture no. of a vise that you have (stamped on the name plate).

LTFV type

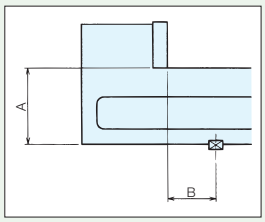

LTFH Type

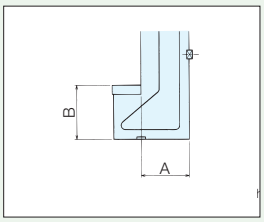

Contact us with the guide block width.

Accuracy Standards (Static Accuracy)

No.	Inspection Points (per 100 mm)	Former JIS Standard (O Grade)	Nabeya SPEC
1	Parallelism between bottom surface of main body and sliding jaw	0.015	0.010
2	Perpendicularity between jaw plate and sliding jaw	0.030	0.015
3	Perpendicularity between T-slot and jaw plate surface of stationary jaw side.	0.015	0.015
4	Parallelism between T-slot and jaw plate surface of stationary jaw side. Applies to LTFV type. Applies to LTFH type.	0.015	0.015
5	Parallelism between the bottom surface of the main body and the jaw plate surface of stationary jaw side.	-	0.015
6	Parallelism between top surface of clamped test block and bottom surface of main body	0.020	0.015
7	Lift-up of top surface of clamped test block	0.030	0.015

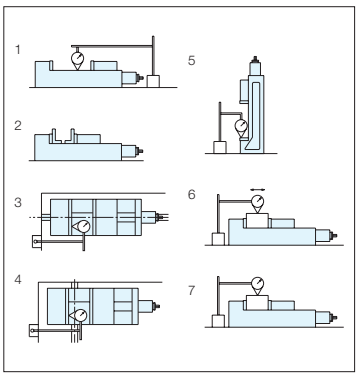

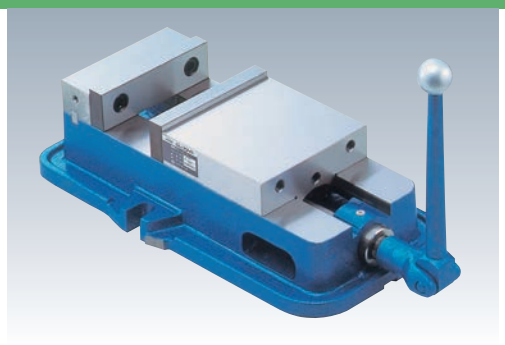

RoHS Compliant

ERON®

No.E-275M

Lock-Tight Precision Machine Vises

Accessories Standard guide block (2 pieces per set) compatible groove width 18 mm ... 1 set
Handle ... 1 piece
Suspension bolt ... 2 pieces (LT250M and LT250MG only)

- The sliding jaw and workpiece are prevented from lifting up by an anti-floating mechanism.
- Made of ductile cast iron, preventing bending and breakage during tightening.
- Sliding parts have been flame heat treated (HRC45) and offer excellent wear resistance.
- High accuracy that surpasses the former JIS standards 0 grade.
- Even in the rare case that it becomes worn out, it can be dismantled and the accuracy can be restored easily.
- Parallel accuracy of matched specification products is within 0.01.

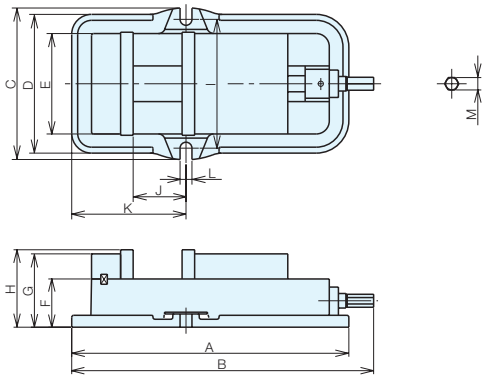

▲ Lock-tight anti-floating mechanism ▲ Lock-tight new multi-jaw system ▲ Lock-tight jaw opening can be increased

Size Chart

No.	A	B	C	D	E	F	G	H	I	J	K	L	M
LT100M	319	337	161	146	101	57	85	89	133	54	127.5	15	14
LT125M	356	387	187	178	126	64	97	102	156	59	140	15	16
LT150M	425	463	230	210	151	73	111	117	192	80	173	18	19
LT200M	553	588	290	279	202	84	134	141	250	92	215	22	22
LT250M	694	737	370	334	253	98.5	161.5	174	310	119	270	24	22

Specifications

No.	Jaw Width	Jaw Depth	Jaw Opening	Standard Guide Block Width	Clamping force kN	Weight (kg)	LT-M			LT-MG (Matched Specifications)		
							Order No.	No.		Order No.	No.	
LT100M	101	32	102	18	40	16	**32101**	**LT100M**		**32446**	**LT100MG**	
LT125M	126	38	112	18	40	25	**32102**	**LT125M**		**32447**	**LT125MG**	
LT150M	151	44	143	18	40	36	**32103**	**LT150M**		**32448**	**LT150MG**	
LT200M	202	57	190	18	40	65	**32104**	**LT200M**		**32449**	**LT200MG**	
LT250M	253	75.5	248	18	50	135	**32105**	**LT250M**		**32450**	**LT250MG**	

Accessories and Optional Parts (Refer to the Following Page)
Reference Pages

Guide block

P.136 ▶

Vise mounting bolt

P.134 ▶

Standard jaw plate JA

P.137 ▶

Step jaw plate SJ

P.137 ▶

Workstop

Handle

Rotating table

P.133 ▶

Base Elements
Clamp Units
Clamping Parts
Machine Vises
Drilling Vises
Vibration Isolation
Surface Plates and Measurement Instruments
Index

Ordering Parallel Products

(A and B can be aligned within 0.01 no matter how many pieces)
If the suffix of the manufacture no. (attached to the outer box and main body) is the same letter, then the product are parallel no matter how many pieces (for standard guide blocks). There is no charge for parallel products.

◆ When purchasing for the first time
Order matched specification products (suffix G)
When ordering, specify the groove width of the machine you are using.

◆ For additional orders
Contact us with the suffix letter of the manufacture no. (stamped on the name plate) and the guide block width of a vise that you have.

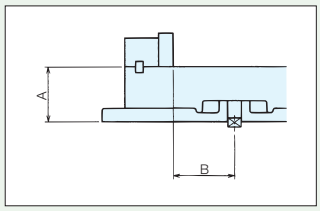

Dismantled Section Drawing

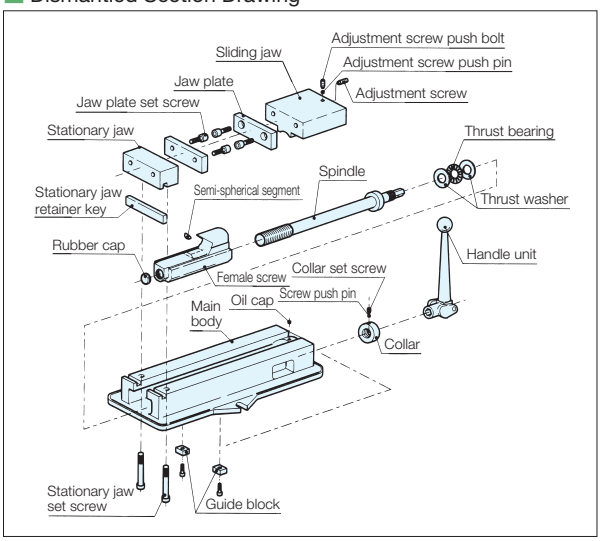

Increasing the Jaw Opening

A large jaw opening can be obtained by changing the jaw plate positions.

◆Jaw opening depending on the jaw plate attachment position

	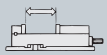	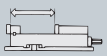	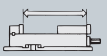	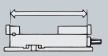
LT100M	0-102	48-150	115-217	163-265
LT125M	0-112	56-168	140-252	196-308
LT150M	0-143	63-206	160-303	223-366
LT200M	0-190	85-275	199-389	284-474
LT250M	0-248	110-358	233-501	366-614

◆How to move the jaw plates

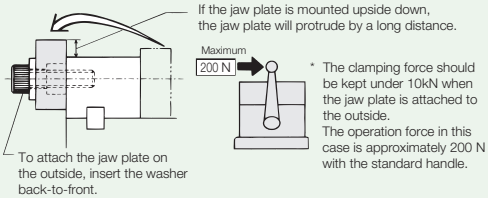

* The clamping force should be kept under 10kN when the jaw plate is attached to the outside.
The operation force in this case is approximately 200 N with the standard handle.

Accuracy Standards

(Static Accuracy)

No.	Inspection Points (per 100 mm)	Former JIS Standard (O Grade)	Nabeya SPEC
1	Parallelism between bottom surface of main body and sliding surface	0.015	0.010
2	Perpendicularity between jaw plate and sliding surface (smaller than right angle)	0.030	0.015
3	Perpendicularity between T-slot and jaw plate surface of stationary jaw side.	0.015	0.010
4	Parallelism between T-slot and jaw plate surface of stationary jaw side.	0.015	0.010
5	Parallelism between bottom surface of rotating table and sliding surface	0.020	0.015
6	Parallelism between the bottom surface and top surface of the rotating table	-	0.010
(Clamping Accuracy)			
7	Parallelism between top surface of clamped test block and bottom surface of main body	0.020	0.015
8	Parallelism between top surface of clamped test block and bottom surface of rotating table	0.030	0.020
9	Lift-up of top surface of test block when clamped	0.030	0.015

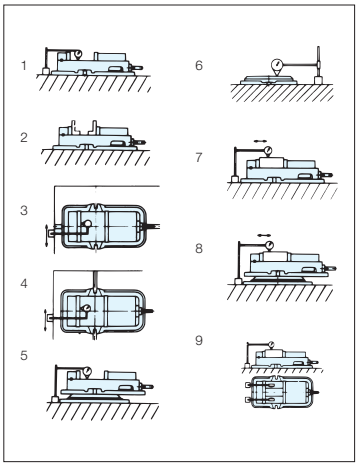

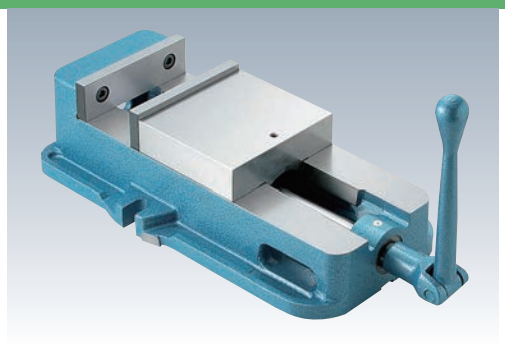

RoHS Compliant

ERON®

No.E-275L

Lock-Tight Precision Machine Vises Type L

Accessories Standard mounting bolt set (2 pieces per set) compatible T-slot width 18 mm ... 1 set
Standard guide block (2 pieces per set) compatible groove width 18 mm ... 1 set
Handle ... 1 piece

- The jaw opening is 45% larger than the same type of vise (LT150M).
- The weight is 20% lower than the same type of vise (LT150M), making it easy to carry around.
- The sliding jaw and workpiece are prevented from lifting up by an anti-floating mechanism.
- Made of ductile cast iron, preventing bending and breakage during tightening.
- Sliding surfaces have been flame heat treated (HRC45) and offer excellent wear resistance.
- High accuracy that surpasses the former JIS standards 0 grade.
- Parallel accuracy of matched specification products is within 0.02.

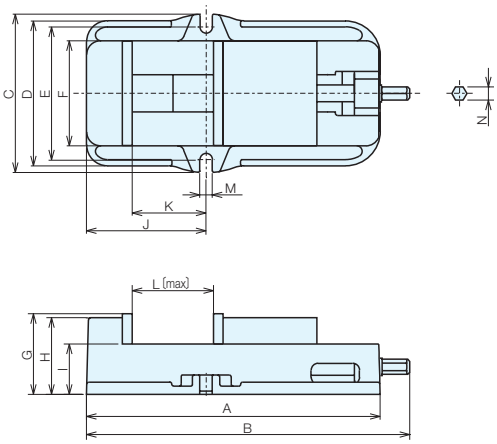

▲ Lock-tight anti-floating mechanism

Size Chart

No.	A	B	C	D	E	F	G	H	I	J	K	L	M	N
LT150L	425	468	230	210	192	152	117	111	73	173	107	207	18	19

Specifications

No.	Jaw Width	Jaw Depth	Jaw Opening	Standard Guide Block Width	Clamping force kN	Weight (kg)	LT-L			LT-LG (Matched Specifications)		
							Order No.	No.		Order No.	No.	
LT150L	152	44	207	18	40	29	**52056**	**LT150L**		**52057**	**LT150LG**	

Accessories and Optional Parts (Refer to the Following Page) Reference Pages

Guide block

P.136 ▶

Vise mounting bolt

P.134 ▶

Standard jaw plate JA

P.137 ▶

Step jaw plate SJ

P.137 ▶

Handle

Rotating Table

P.133 ▶

Base Elements
Clamp Units
Clamping Parts
Machine Vises
Drilling Vises
Vibration Isolation
Surface Plates and Measurement Instruments
Index

Parts Details

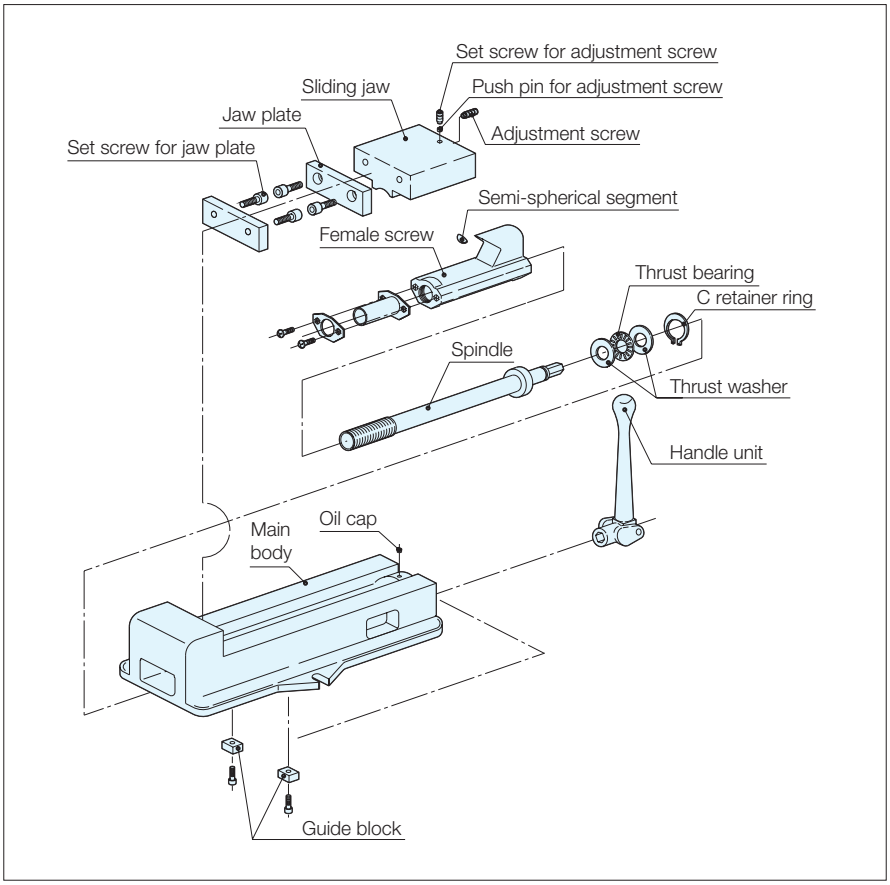

When ordering parallel products

A and B align within 0.02 no matter how many pieces
Order matched specification products (suffix G).
When ordering, specify the groove width of the machine you are using.
Matched specification products can only be manufactured when newly purchased.

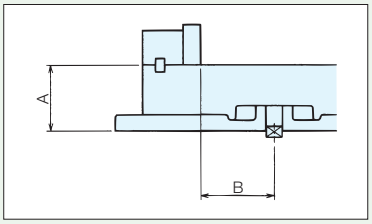

Accuracy Standards

(Static Accuracy)

No.	Inspection Points (per 100 mm)	Former JIS Standard (Grade 1)	Nabeya SPEC
1	Parallelism between bottom surface of main body and sliding surface	0.020	0.015
2	Perpendicularity between jaw plate and sliding surface (smaller than right angle)	0.050	0.015
3	Perpendicularity between T-slot and jaw plate surface of stationary jaw side.	0.020	0.020
4	Parallelism between T-slot and jaw plate surface of stationary jaw side.	0.020	0.020
5	Parallelism between bottom surface of rotating table and sliding surface	0.030	0.020
6	Parallelism between the bottom surface and top surface of the rotating table	--	0.010
(Clamping Accuracy)			
7	Parallelism between top surface of clamped test block and bottom surface of main body	0.030	0.020
8	Parallelism between top surface of clamped test block and bottom surface of rotating table	0.040	0.030
9	Lift-up of top surface of test block when clamped	0.050	0.020

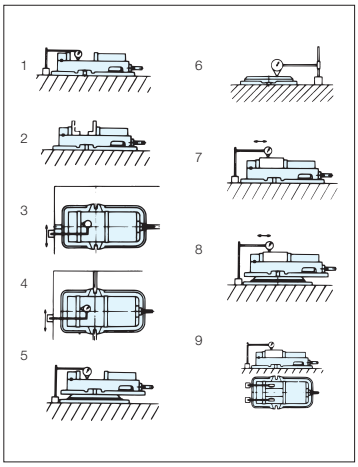

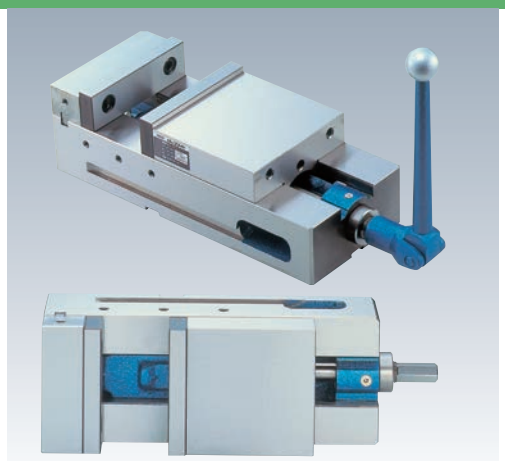

Optimal for machining centers and NC milling machine!

RoHS Compliant

ERON

No.E-275M

Lock-Tight MC Precision Machine Vises

Accessories Standard guide block (2 pieces per set) compatible groove width 18 mm ... 1 set
Handle ... 1 piece

- Parallel accuracy of matched specification products is within 0.01.
- Can also be used facing horizontally.

▲ Lock-tight anti-floating mechanism

▲ Lock-tight new multi-jaw system

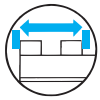

▲ Lock-tight jaw opening can be increased

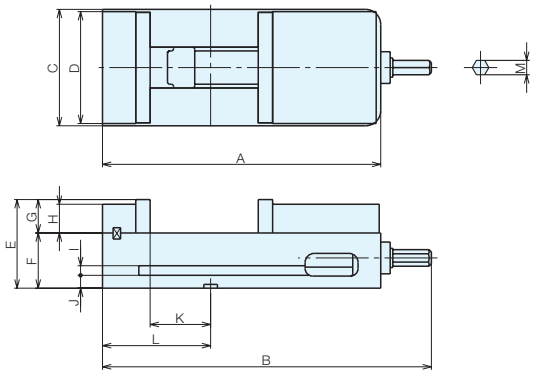

Size Chart

No.	A	B	C	D	E	F	G	H	I	J	K	L	M
LT100MC	268	316	104	101	89	57	32	28	12	12	54	102	14
LT150MC	368	435	154	151	117.2	73	44.2	38	12.7	17	80	143	19

Specifications

No.	Jaw Width	Jaw Depth	Jaw Opening	Standard Guide Block Width	Clamping force kN	Weight (kg)	LTMC			LTMC-G (Matched Specifications)		
							Order No.	No.		Order No.	No.	
LT100MC	101	32	102	18	30	11	**32186**	LT100MC		**32451**	LT100MCG	
LT150MC	151	44	143	18	40	32	**32187**	LT150MC		**32452**	LT150MCG	

Usage Examples

Ordering Parallel Products

(A and B can be aligned within 0.01 no matter how many pieces)
If the suffix of the manufacture no. (attached to the outer box and main body) is the same letter, then the product are parallel no matter how many pieces. There is no charge for parallel products.

◆ When purchasing for the first time
Order matched specification products (suffix G)
When ordering, specify the groove width of the machine you are using.

◆ For additional orders
Contact us with the suffix letter of the manufacture no. (stamped on the name plate) and the guide block width of a vise that you have.

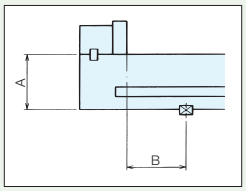

Increasing the Jaw Opening

A large jaw opening can be obtained by changing the jaw plate positions.

◆ Jaw opening depending on the jaw plate attachment position

	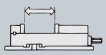	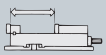	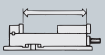	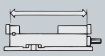
LT100MC	0-102	48-150	115-217	163-265
LT150MC	0-143	63-206	160-303	223-366

◆ How to move the jaw plates

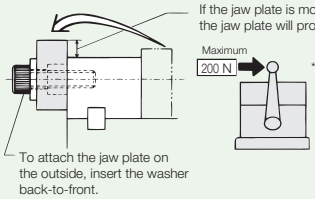

* The clamping force should be kept under 10kN when the jaw plate is attached to the outside.
The operation force in this case is approximately 200 N with the standard handle.

Base Elements
Clamp Units
Clamping Parts
Machine Vises
Drilling Vises
Vibration Isolation
Surface Plates and Measurement Instruments
Index

Accuracy Standards

(Static Accuracy)

No.	Inspection Points (per 100 mm)	Former JIS Standard (O Grade)	Nabeya SPEC
1	Parallelism between bottom surface of main body and sliding surface	0.015	0.010
2	Perpendicularity between jaw plate and sliding surface (smaller than right angle)	0.030	0.015
3	Perpendicularity between T-slot and jaw plate surface of stationary jaw side.	0.015	0.010
4	Parallelism between T-slot and jaw plate surface of stationary jaw side.	0.015	0.010
5	Perpendicularity between side face of main body and sliding surface	-	0.030
6	Perpendicularity between side face of main body and sliding surface	-	0.030
7	Perpendicularity between side face of main body and jaw plate surface of stationary jaw side	-	0.050
8	Perpendicularity between side face of main body and jaw plate surface of stationary jaw side	-	0.050
	(Clamping Accuracy)		
9	Parallelism between top surface of clamped test block and bottom surface of main body	0.020	0.015
10	Lift-up of top surface of test block when clamped	0.030	0.015

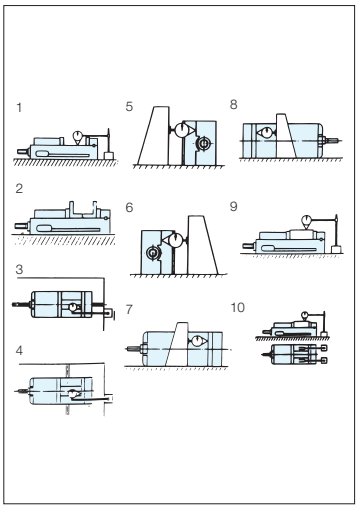

Parts details

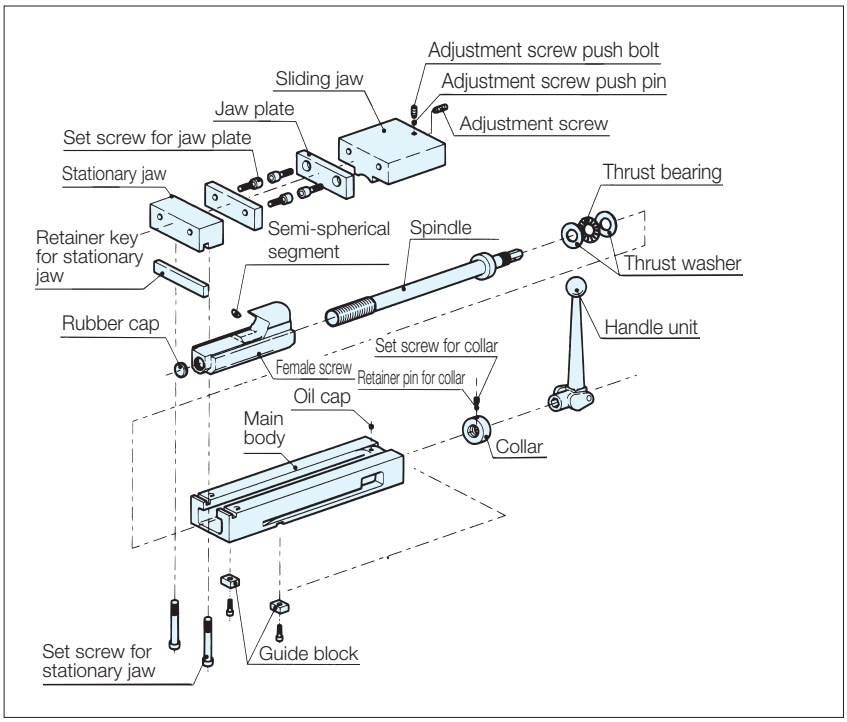

Accessories and Optional Parts (Refer to the Following Page)

Reference Pages

Guide block
P.136

Standard jaw plate JA
P.137

Step jaw plate SJ
P.137

Attachment clamp
P.135

Handle

Base Elements
Clamp Units
Clamping Parts
Machine Vises
Drilling Vises
Vibration Isolation
Surface Plates and Measurement Instruments
Index

LTMC-2

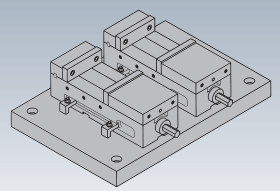

RoHS Compliant

ERON®

No.E-275T

Lock-Tight MC Precision Machine Vises - Multiple Jaw Vises

Accessories Guide block ... 2 pieces per set
Handle ... 1

- Useful for machining multiple workpieces of the same type, performing multiple machining processes, and machining long workpieces.
- Locating to machine tables can be easily performed using guide blocks.
- Can also be used as a single vise.

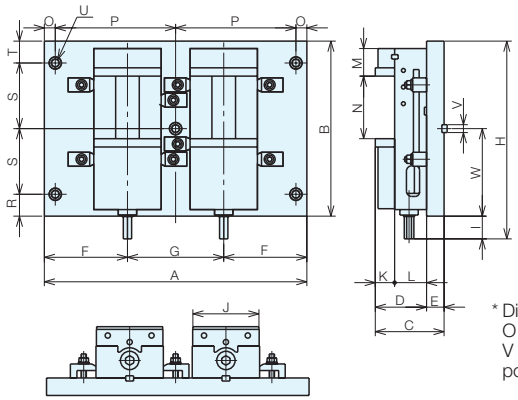

▲ Lock-tight anti-floating mechanism

* Dimensions O to W are user specification
O to U are mounting hole dimensions
V and W are the guide block width and position

Specifications

Order No.	No.	Used Vise	A	B	C	D	E	F	G	H	I	J	K	L	M	N	Weight (kg)
46860	**LT100MC-2**	LT100MC	450	300	119	89	30	147.5	155	334	34	101	32	57	48	102	54
46863	**LT150MC-2**	LT150MC	600	400	157.2	117.2	40	190	220	452	52	151	44.2	73	63	143	139

LTMC-3

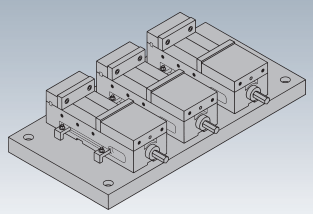

Accessories Guide block ... 2 pieces per set
Handle ... 1

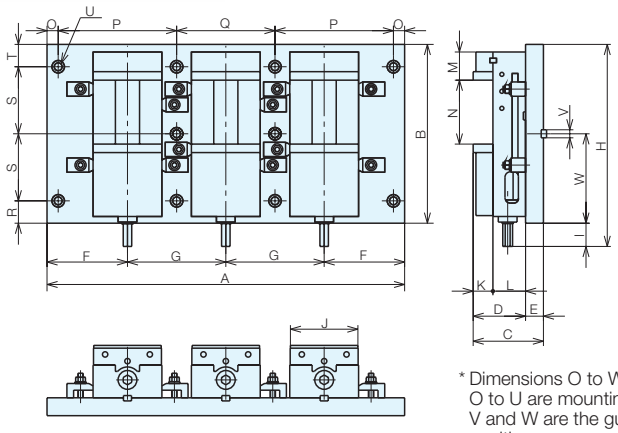

* Dimensions O to W are user specification
O to U are mounting hole dimensions
V and W are the guide block width and position

Specifications

Order No.	No.	Used Vise	A	B	C	D	E	F	G	H	I	J	K	L	M	N	Weight (kg)
46861	**LT100MC-3**	LT100MC	600	300	119	89	30	147.5	155	334	34	101	32	57	48	102	75
46864	**LT150MC-3**	LT150MC	800	400	157.2	117.2	40	180	220	452	52	151	44.2	73	63	143	196

Base Elements
Clamp Units
Clamping Parts
Machine Vises
Drilling Vises
Vibration Isolation
Surface Plates and Measurement Instruments
Index

LTMC-4

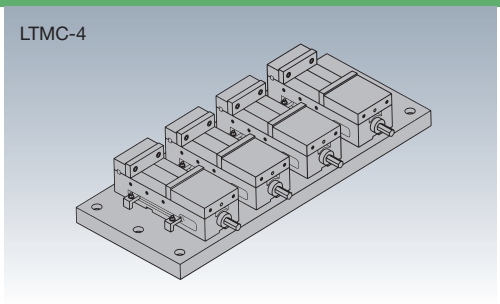

Accessories Guide block ... 2 pieces per set
Handle ... 1

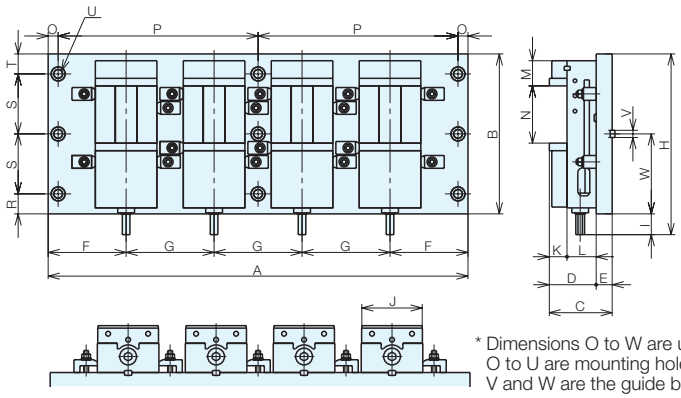

* Dimensions O to W are user specification
O to U are mounting hole dimensions
V and W are the guide block width and position

Specifications

Order No.	No.	Used Vise	A	B	C	D	E	F	G	H	I	J	K	L	M	N	Weight (kg)
46862	**LT100MC-4**	LT100MC	800	300	119	89	30	167.5	155	334	34	101	32	57	48	102	100
46865	**LT150MC-4**	LT150MC	1050	400	157.2	117.2	40	195	220	452	52	151	44.2	73	63	143	259

Base Elements
Clamp Units
Clamping Parts
Machine Vises
Drilling Vises
Vibration Isolation
Surface Plates and Measurement Instruments
Index

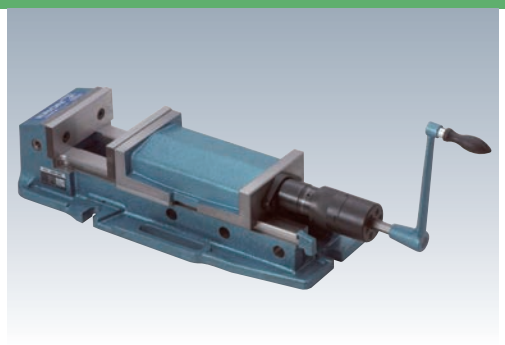

RoHS Compliant

ERON

No.E-475

Lock-Tight Hydraulic Machine Vises MK Ⅲ

Accessories Special Mounting bolt set - Compatible T-slot width 18 mm ... 2 sets
Standard guide block (2 pieces per set) compatible groove width 18 mm ... 1 set
Handle ... 1 piece

- The total length is 125 mm shorter and the weight is 7 kg lighter than the conventional type. Furthermore, offers a mis-operation prevention mechanism where the hydraulic and manual switch is toothed.
- Made of ductile cast iron, minimizing bending and breakage during tightening.
- Sliding parts have been flame heat treated (HRC45) and offer excellent wear resistance.
- The hydraulic pump is finished as a pump that is capable of powerful clamping with low trouble from over 300,000 operational tests.
- The optimal jaw opening from 3 positions is obtained by adjusting the position where opening and closing starts.
- High accuracy that surpasses the former JIS standards 0 grade.

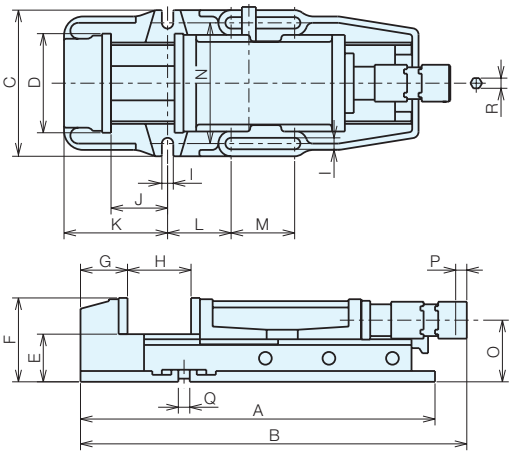

▲ Lock-tight anti-floating mechanism

▲ Lock-tight hydraulic mechanism

Size Chart

No.	A	B	C	D	E	F	G	H	I	J	K	L	M	N	O	P	Q	R
LTH3P-150S	558	507-807	210	156	75	132	74	0-300	18	89	163	100	100	190	97	17.5	18	14

Specifications

No.	Jaw Width	Jaw Depth	Jaw Opening	Standard Guide Block Width	Clamping force kN	Weight (kg)	LTH3P			LTH3P-G (Matched Specification)		
							Order No.	No.		Order No.	No.	
LTH3P-150S	156	57	300	18	40	41	**67819**	**LTH3P-150S**		**68833**	**LTH3P-150SG**	

Clamping Method

(1) Clamping method by hydraulic pressure
- With the matching parts of the switching collar and socket separated, rotate the handle in the clockwise direction.
- The jaw plates touch the workpiece, and the internal clutch engages with a clamping force of approximately 10 kN.
- After the clutch has engaged, only the handle and socket rotate, and the hydraulic clamping operation is performed.

- Clamping force and handle operation (after the clutch is engaged)

Handle Operation (Rotation)	1	2	3	4
Clamping Force (kN)	12	20	30	40

- The clamping stroke by hydraulic pressure is approximately 1.8 mm.

(2) Clamping method by screw
- Slide the switching collar towards the socket side, and with the switching collar and socket interlocked, rotate the handle in the clockwise direction.
(While interlocked, the clutch does not operate).
- Clamping by screw has a maximum of approximately 10 kN.

(3) Combination of clamping by screw and clamping by hydraulic pressure
- When clamping workpieces that deform easily and workpieces where the workpiece surface is a cast surface, perform clamping using the screw and then perform clamping using hydraulic pressure.
- Perform the clamping operation by screw as shown in (2) and then perform clamping by hydraulic pressure as shown in (1).
- The clamping force is (clamping force by screw) + (clamping force by hydraulic pressure).
- For workpieces where large deformation may occur, check that the workpiece is securely fixed after clamping.

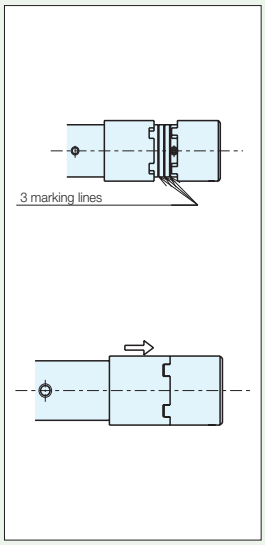

Base Elements
Clamp Units
Clamping Parts
Machine Vises
Drilling Vises
Vibration Isolation
Surface Plates and Measurement Instruments
Index

Parts Details

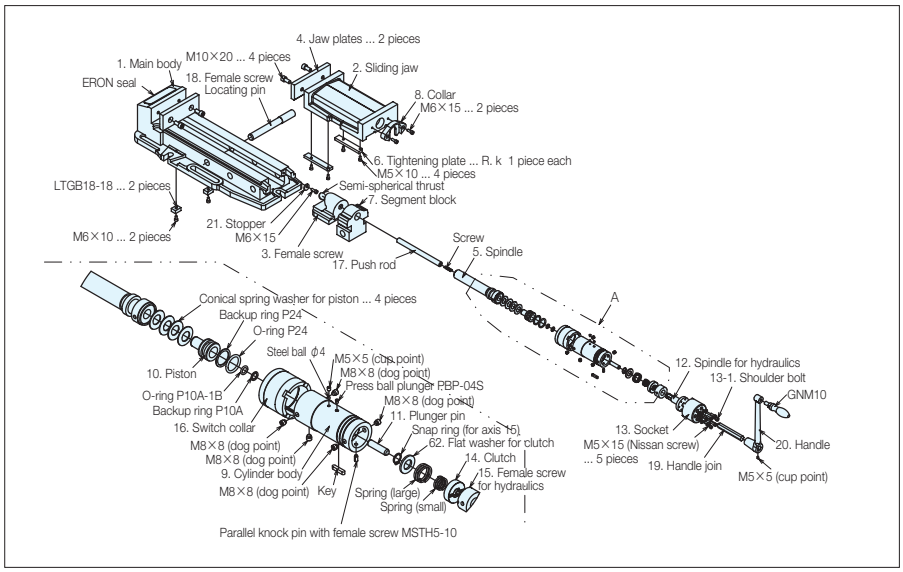

When ordering parallel products

A and B align within 0.01 no matter how many pieces
Order multi-jaw specification products (suffix G)
When ordering, specify the groove width of the machine you are using.
Can only be manufactured when newly purchasing Matched specification products.

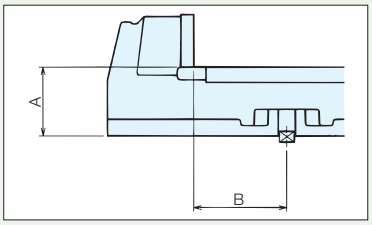

Hydraulic Unit

Compatible Models	Order No.	No.	
LTH3P-150S	**69390**	**LTH3P150S-ASSY**	

Reference Pages

Guide block

P.136 ▶

Vise mounting bolt

P.134 ▶

Standard jaw plate JA

P.137 ▶

Step jaw plate SJ

P.137 ▶

Workstop

Handle

Accuracy Standards (Static Accuracy)

No.	Inspection Points (per 100 mm)	Former JIS Standard (O Grade)	Nabeya SPEC
1	Parallelism between bottom surface of main body and sliding surface	0.015	0.010
2	Perpendicularity between jaw plate and sliding surface (smaller than right angle)	0.030	0.015
3	Perpendicularity between T-slot and jaw plate surface of stationary jaw side.	0.015	0.015
4	Parallelism between T-slot and jaw plate surface of stationary jaw side.	0.015	0.015
(Clamping Accuracy)			
5	Parallelism between top surface of clamped test block and bottom surface of main body	0.020	0.015
6	Lift-up of top surface of test block when clamped	0.030	0.015

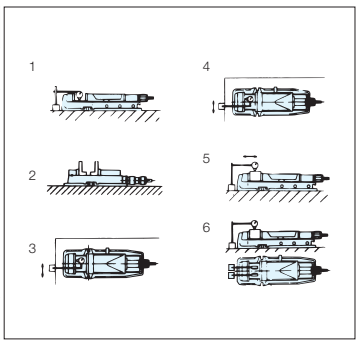

Base Elements
Clamp Units
Clamping Parts
Machine Vises
Drilling Vises
Vibration Isolation
Surface Plates and Measurement Instruments
Index

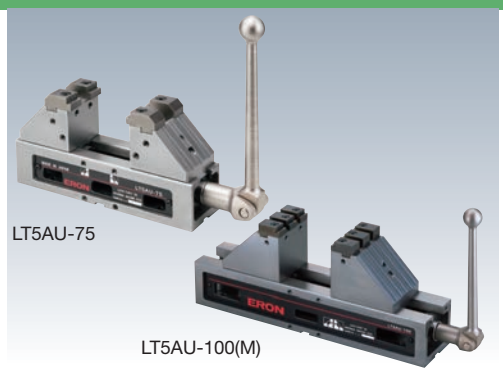

RoHS Compliant

ERON

No.E-940

Lock-Tight 5 Axis Machine Vises

- Level raising structure that avoids interference with the main spindle
  Allows the cutting tool length to be shortened, reducing machining time and conserving cutting tool.
- Lock-tight anti-floating mechanism
  Workpieces can be prevented from lifting up by applying force onto the sliding jaw at an angle of 45 degrees downwards using a semi-spherical segment.
- Replaceable jaw plates
  Includes 3 different jaw plates as standard, allowing you to use the best jaw plates for the machining conditions.
- Workpieces can always be clamped in the center position of the vise, removing the work of programming.

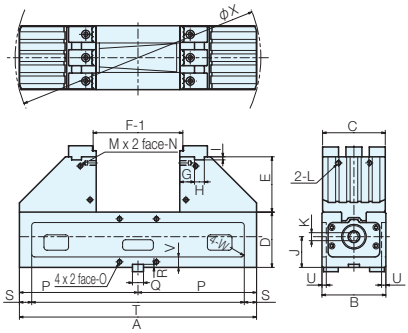

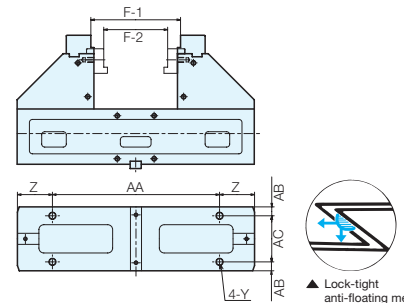

▲ Lock-tight anti-floating mechanism

Accessories

LT5AU-75

Step jaw plates (grid type) LT5AU-75SJG-8 (2 pieces per set) ... 2 sets
Step jaw plates (depth 20) LT5AU-75SJ-20 (2 pieces per set) ... 1 set
Step jaw plates (depth 30) LT5AU-75SJ-30 (2 pieces per set) ... 1 set
Standard clamping set BCS14Q1 (2 pieces per set) ... 2 sets
Standard guide block LT14-14 (2 pieces per set) ... 1 set
Standard handle LT-10HN250 ... 1 piece

LT5AU-100(M)

Step jaw plates (grid type) LT5AU-100SJG-8 (6 pieces per set) ... 1 set
Step jaw plates (depth 20) LT5AU-100SJ-20 (2 pieces per set) ... 1 set
Step jaw plates (depth 30) LT5AU-100SJ-30 (2 pieces per set) ... 1 set
Standard clamping set BCS18Q1 (2 pieces per set) ... 2 sets
Standard guide block LT18-18 (2 pieces per set) ... 1 set
Standard handle LT-13HN250, LT-13HN370 ... 1 piece of each

Specifications

Order No.	No.	Jaw Width	Total Length	Standard Guide Block Width	Standard Clamp Compatible T-Slot Width	Clamping Force (kN)	Weight (kg)	
93017	**LT5AU−75**	75	286	14	14	15	15	
91541	**LT5AU−100M**	102	386	18	18	20	30	
87470	**LT5AU−100**	102	484	18	18	20	32	

Size Chart

No.	A	B	C	D	E	F-1	F-2	G	H	I	J	K	L	M	N
LT5AU−75	286	77	75	65	60	22-108	13-76	19	16	5	39	10	M8X1.25	2	M8X1.25
LT5AU−100M	386	104	102	90	90	23-142	13-100	24	16	5	50	13	M8X1.25	4	M8X1.25
LT5AU−100	484	104	102	90	90	23-240	13-198	24	16	5	50	13	M8X1.25	4	M8X1.25

No.	O	P	Q	R	S	T	U	V	W	X	Y	Z	AA	AB	AC
LT5AU−75	M8X1.25	143	14	4	30	226	5	12	R5	300	M10X1.5	56	174	13.5	48
LT5AU−100M	M8X1.25	193	18	5	20	346	7	17	R5	400	M12X1.75	57	272	14.5	75
LT5AU−100	M8X1.25	242	18	5	20	444	7	17	R5	500	M12X1.75	57	370	14.5	75

Level raising structure that avoids interference with the main axis

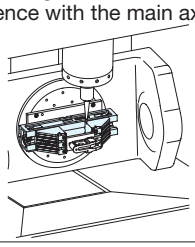

Lock-tight anti-floating mechanism

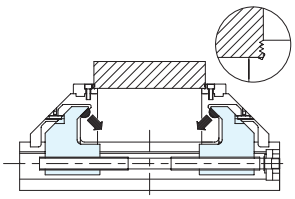

3 types of jaw plates included as standard

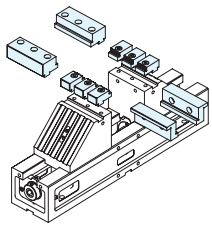

Base Elements
Clamp Units
Clamping Parts
Machine Vises
Drilling Vises
Vibration Isolation
Surface Plates and Measurement Instruments
Index

Parts details

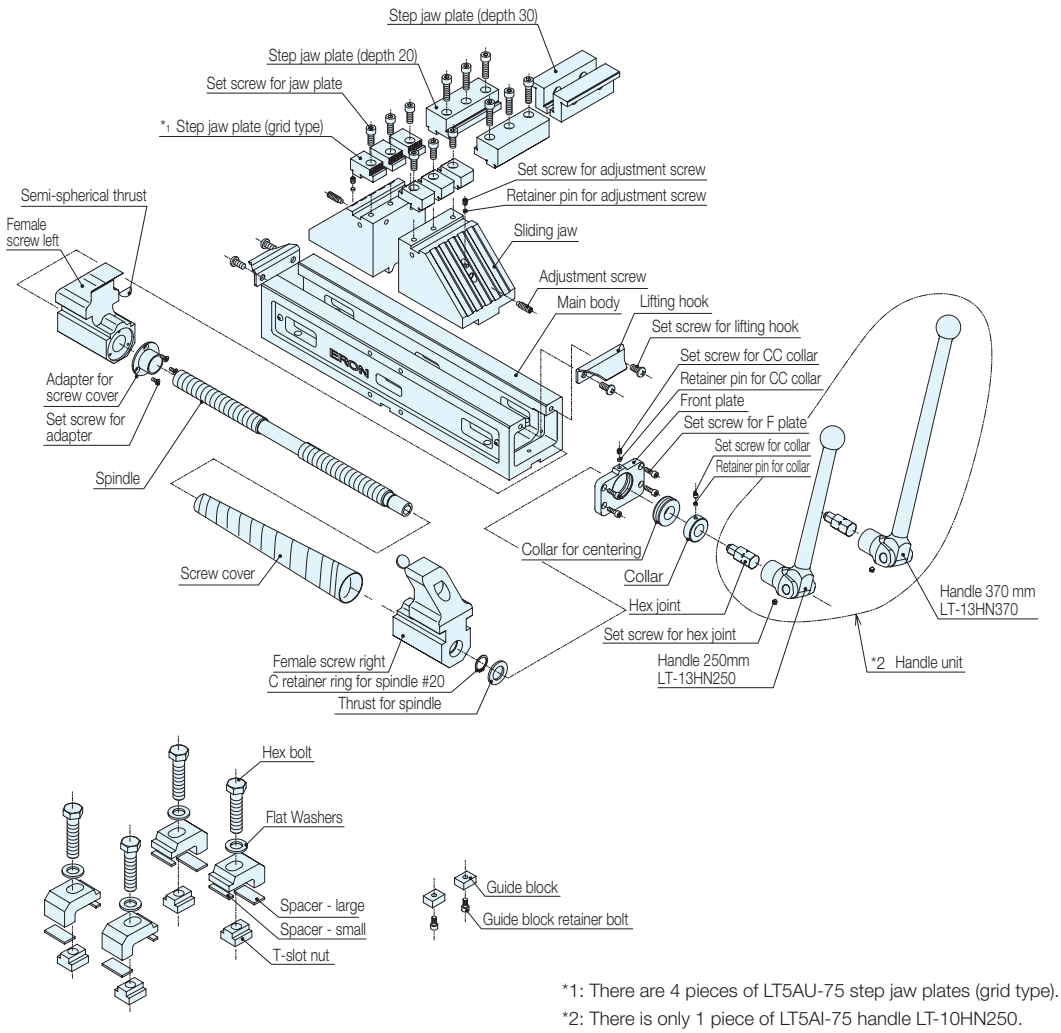

*1: There are 4 pieces of LT5AU-75 step jaw plates (grid type).
*2: There is only 1 piece of LT5AI-75 handle LT-10HN250.

Reference Pages

Step jaw plate (grid type) P.126
Step jaw plate (depth 20) P.126
Step jaw plate (depth 30) P.126
Standard jaw plate P.127
Universal jaw plate P.128
Clamping Sets P.135
Guide Block P.136
Handle
Parallel stop P.127
Height block
Locating Workstop P.127

Base Elements
Clamp Units
Clamping Parts
Machine Vises
Drilling Vises
Vibration Isolation
Surface Plates and Measurement Instruments
Index

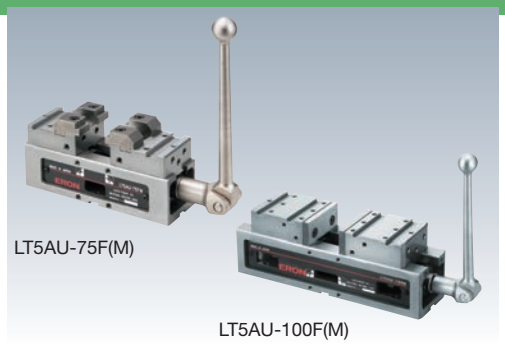

RoHS Compliant

ERON®

No.E-940

Lock-Tight 5 Axis Machine Vises

- Supports a wide variety of workpieces
  Attachment of the jaw plates can be selected from four different positions, making it possible to support a wide variety of different workpieces.
- Lock-tight anti-floating mechanism
  Workpieces can be prevented from lifting up by applying force onto the sliding jaw at an angle of 45 degrees downwards using a semi-spherical segment.
- Replaceable jaw plates
  Includes 3 different jaw plates as standard, allowing you to use the best jaw plates for the machining conditions.
- Workpieces can always be clamped in the center position of the vise, removing the work of programming.

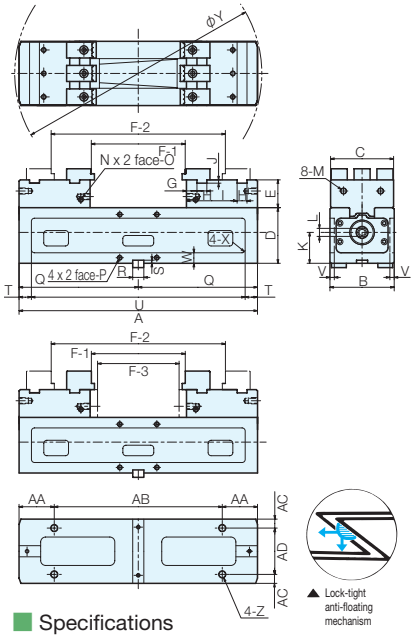

Accessories

LT5AU-75F(M)

Step sliding jaws (grid type) LT5AU-75SJG-8 (2 pieces per set) ... 2 sets
Step sliding jaws (depth 20) LT5AU-75SJ-20 (2 pieces per set) ... 1 set
Step sliding jaws (depth 30) LT5AU-75SJ-30 (2 pieces per set) ... 1 set
Standard clamping set BCS14Q1 (2 pieces per set) ... 2 sets
Standard guide block LT14-14 (2 pieces per set) ... 1 set
Standard handle LT-10HN250 ... 1 piece

LT5AU-100F (M)

Step sliding jaws (grid type) LT5AU-100SJG-8 (6 pieces per set) ... 1 set
Step sliding jaws (depth 20) LT5AU-100SJ-20 (2 pieces per set) ... 1 set
Step sliding jaws (depth 30) LT5AU-100SJ-30 (2 pieces per set) ... 1 set
Standard clamping set BCS18Q1 (2 pieces per set) ... 2 sets
Standard guide block LT18-18 (2 pieces per set) ... 1 set
Standard handle LT-13HN250, LT-13HN370 ... 1 piece of each

Specifications

Order No.	No.	Jaw Width	Total Length	Standard Guide Block Width	Standard Clamp Compatible T-Slot Width	Clamping Force (kN)	Weight (kg)	
101710	**LT5AU−75FM**	75	236	14	14	16	10	
93018	**LT5AU−75F**	75	286	14	14	16	12	
91542	**LT5AU−100FM**	102	386	18	18	20	24	
91540	**LT5AU−100F**	102	484	18	18	20	26	

Size Chart

No.	A	B	C	D	E	F-1	F-2	F-3	G	H	I	J	K	L	M	N
LT5AU−75FM	236	77	75	65	30	14-58	94-138	0-34	17	16	57	5	39	10	M8×1.25	2
LT5AU−75F	286	77	75	65	30	22-108	94-188	0- 80	17	16	57	5	39	10	M8×1.25	2
LT5AU−100FM	386	104	102	90	45	28-148	158-278	8-128	17	16	82	5	50	13	M10×1.5	4
LT5AU−100F	484	104	102	90	45	28-246	158-376	8-226	17	16	82	5	50	13	M10×1.5	4

No.	O	P	Q	R	S	T	U	V	W	X	Y	Z	AA	AB	AC	AD
LT5AU−75FM	M8×1.25	M8×1.25	118	14	4	30	176	5	12	R5	250	M10×1.5	31	174	13.5	50
LT5AU−75F	M8×1.25	M8×1.25	143	14	4	30	226	5	12	R5	300	M10×1.5	56	174	13.5	50
LT5AU−100FM	M8×1.25	M8×1.25	193	18	5	20	346	7	17	R5	400	M12×1.75	57	272	14.5	75
LT5AU−100F	M8×1.25	M8×1.25	242	18	5	20	444	7	17	R5	500	M12×1.75	57	370	14.5	75

Level raising structure that avoids interference with the main axis

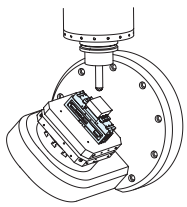

Lock-tight anti-floating mechanism

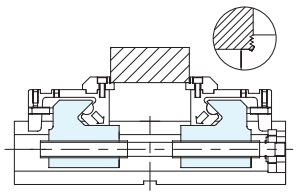

3 types of jaw plates included as standard

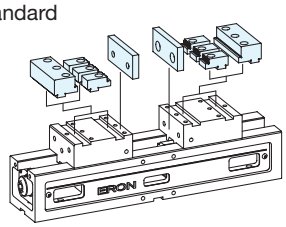

Parts Detail

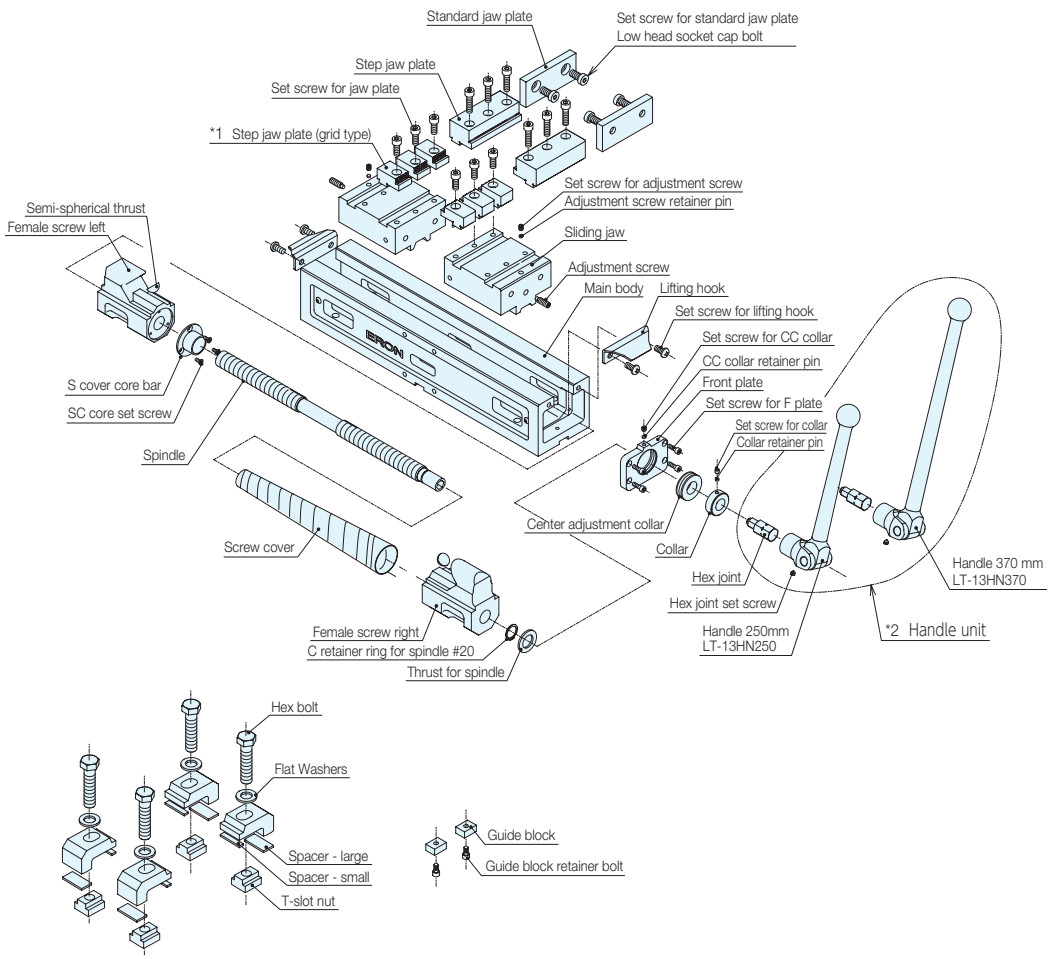

*1: There are 4 pieces of LT5AU-75F (M) step jaw plates (grid type).
*2: There is only 1 piece of LT5AI-75F (M) handle LT-10HN250.

Reference Pages

Step jaw plate (grid type)

P.126

Step jaw plate (depth 20)

P.126

Standard jaw plate JA

P.137

Universal jaw plate

P.128

Clamping Sets

P.135

Guide Block

P.136

Handle

Parallel stop

P.127

Height block

Locating Workstop

P.127

RoHS Compliant

No.E-940B

Lock-Tight 5 Axis Machine Vises

ERON

Step Jaw Plates (Grid Type)

LT5AU−75SJG−8
LT5AU−100SJG−8

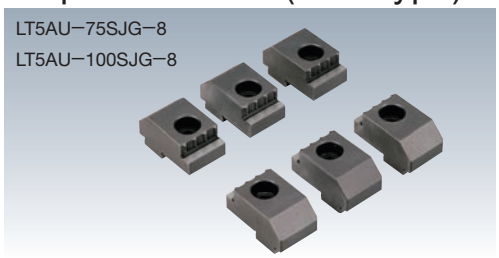

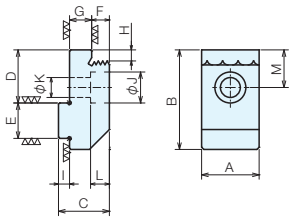

Specifications

Order No.	No.	Compatible Vises	A	B	C	D	E	F	G
93019	**LT5AU−75SJG−8**	LT5AU-75(F,FM)	26	45	23	24	16	8	10
88807	**LT5AU−100SJG−8**	LT5AU−100(M),100F(M)	26	45	23	24	16	8	10

No.	H	I	J	K	L	M	No. Supplied	Weight (kg)
LT5AU−75SJG-8	5	5	14	9	8.5	17	2 pieces per set	0.3
LT5AU−100SJG−8	5	5	14	9	8.5	17	6 pieces per set	0.85

Step Jaw Plates (Depth 20)

LT5AU−75SJ−20
LT5AU−100SJ−20

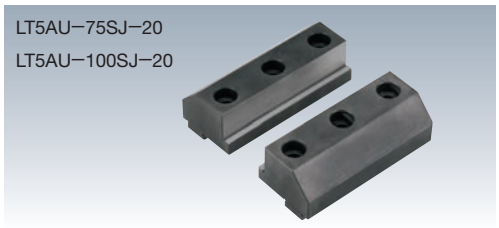

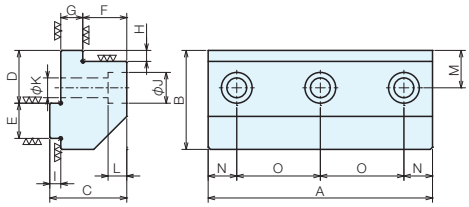

Specifications

(2 pieces per set)

Order No.	No.	Compatible Vises	A	B	C	D	E	F	G	H
93020	**LT5AU−75SJ−20**	LT5AU-75(F,FM)	75	45	35	24	16	20	10	5
88808	**LT5AU−100SJ−20**	LT5AU−100(M),100F(M)	102	45	35	24	16	20	10	5

No.	I	J	K	L	M	N	O	Weight (kg)
LT5AU−75SJ−20	5	14	9	8.5	17	13	49	1.3
LT5AU−100SJ−20	5	14	9	8.5	17	13	38	1.5

Step Jaw Plates (Depth 30)

LT5AU−75SJ−30
LT5AU−100SJ−30

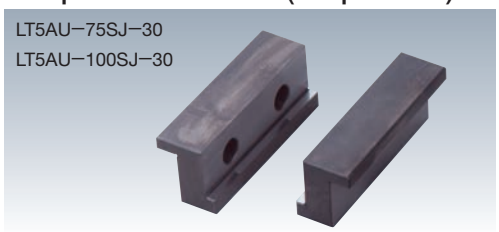

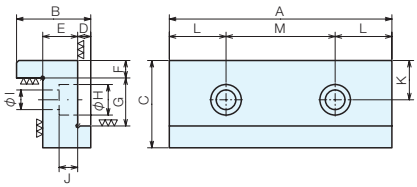

Specifications

(2 pieces per set)

Order No.	No.	Compatible Vises	A	B	C	D	E	F	G
93021	**LT5AU−75SJ−30**	LT5AU−75	75	34	40	6	16	8	22
88809	**LT5AU−100SJ−30**	LT5AU−100(M)	102	34	40	6	16	8	22

No.	H	I	J	K	L	M	Weight (kg)
LT5AU−75SJ−30	14	9	8.5	18	21.5	32	0.9
LT5AU−100SJ−30	14	9	8.5	18	26	50	1.7

Base Elements
Clamp Units
Clamping Parts
Machine Vises
Drilling Vises
Vibration Isolation
Surface Plates and Measurement Instruments
Index

Standard Jaw Plates

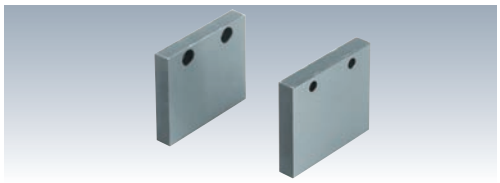

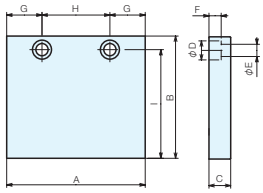

Specifications

Order No.	No.	Compatible Vises	A	B	C	D	E	F	G	H	I	Weight (kg)
93023	**LT5AU−75JA−60**	LT5AU-75	75	60	14	14	9	8.5	21.5	32	50	0.9
88810	**LT5AU−100JA**	LT5AU−100(M)	102	90	16	14	9	9	26	50	80	1.5

Usage Examples

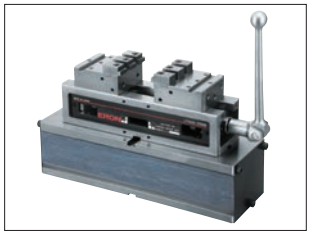

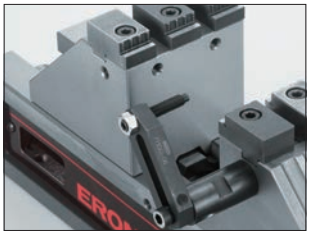

Locating Workstop

Set Contents
Joint ... 1 piece
Clamping G straight 7110G-08 ... 1 piece
Flat washer WF8 ... 1 piece
Hex bolt M8 × 25 ... 1 piece
Hex socket head set screw (dog point) M8 × 50 ... 1 piece
Hex nut M8 ... 1 piece

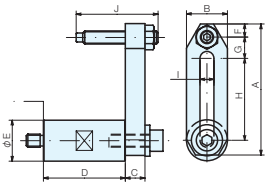

Specifications

Order No.	No.	Compatible Vises	A	B	C	D	E	F	G	H	I	J	Weight (kg)
88811	**LT5AU−100WST**	LT5AU - All models	80	25	12	50	25	17	13	50	8.5	50	0.4

Base Elements
Clamp Units
Clamping Parts
Machine Vises
Drilling Vises
Vibration Isolation
Surface Plates and Measurement Instruments
Index

RoHS Compliant

No.E-940B

Lock-Tight 5 Axis Machine Vises

ERON®

Universal Jaw Plate Sets

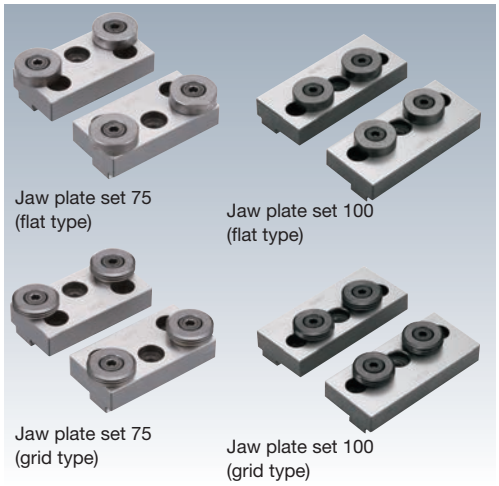

Set Contents Base ... 1 piece
Round jaw plate (flat, grid) ... 2 pieces (either type)
Hex bolt M8 × 16 ... 2 pieces
Low head socket cap bolt M8 × 15 ... 2 pieces

- Makes it possible to clamp circular workpieces and Irregular shaped workpieces using Lock-Tight 5 Axis Machine Vises.
- Use as the combination of the base and round jaw plates.

Jaw plate set 75
(flat type)

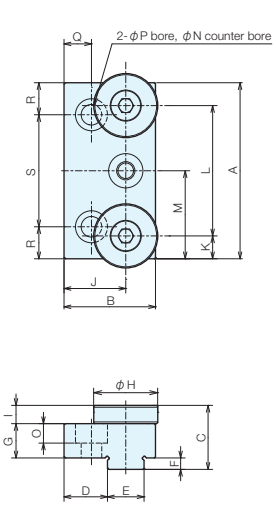

Jaw plate set 75
(grid type)

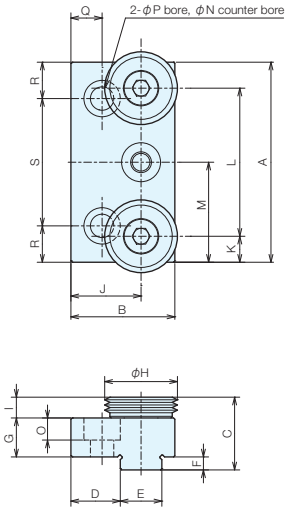

Jaw plate set 100
(flat type)

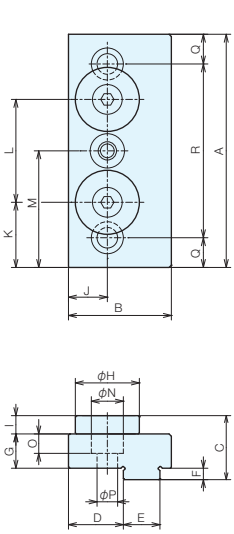

Jaw plate set 100
(grid type)

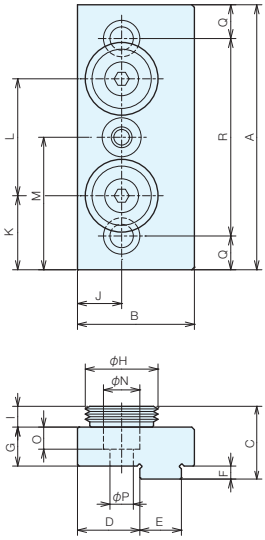

Specifications

(2 pieces per set)

Order No.	No.	Compatible Models	Type	Weight (kg)	
97945	**UJS75−RRG**	LT5AU-75(F,FM)	Flat and grid	1.1	
97943	**UJS75−R**	LT5AU-75(F,FM)	Flat	0.9	
97944	**UJS75−RG**	LT5AU-75(F,FM)	Grid	0.9	
97237	**UJS100−RRG**	LT5AU-100(M,F,FM)	Flat and Grid	1.5	
97235	**UJS100−R**	LT5AU-100(M,F,FM)	Flat	1.3	
97236	**UJS100−RG**	LT5AU-100(M,F,FM)	Grid	1.3	

Size Chart

No.	A	B	C	D	E	F	G	H	I	J	K	L	M	N	O	P	Q	R	S
UJS75−(R,RG,RRG)	77	40	28	19	16	5	15	28	8	27	10	57	38.5	14	8.5	9	12	14	49
UJS100−(R,RG,RRG)	102	45	28	24	16	5	15	28	8	17	28.5	45	51	14	8.5	9	13	76	-

Base Elements
Clamp Units
Clamping Parts
Machine Vises
Drilling Vises
Vibration Isolation
Surface Plates and Measurement Instruments
Index

Universal Round Jaw Plates

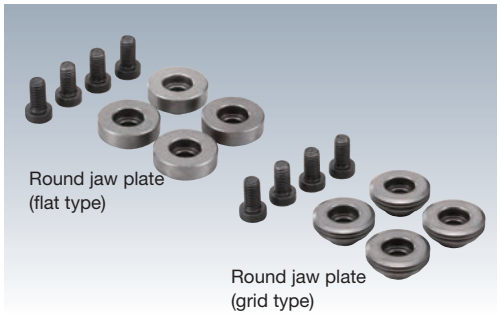

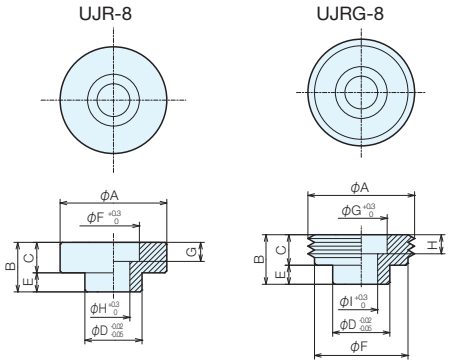

Specifications

(4 pieces per set)

Order No.	No.	Compatible Models	Type	A	B	C	D	E	F	G	H	I	Weight (kg)
97239	**UJR-8**	LT5AU all sizes	Flat	28	13	8	15	5	13.6	5	8.3	-	0.2
97240	**UJRG-8**	LT5AU all sizes	Grid	28	13	8	15	5	24.5	13.6	5	8.6	0.2

Universal Bases

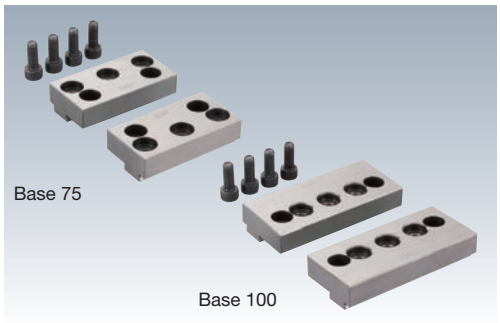

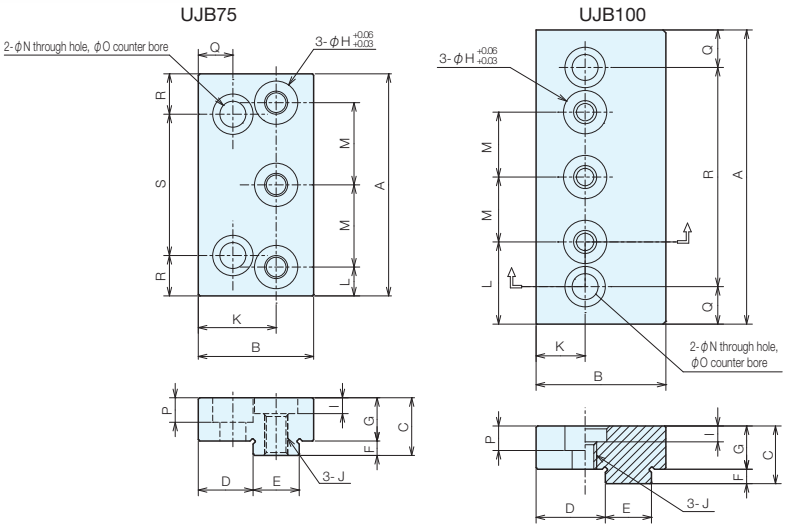

Specifications

(2 pieces per set)

Order No.	No.	Compatible Models	A	B	C	D	E	F	G	H
97946	**UJB75**	LT5AU-75(F,FM)	77	40	20	19	16	5	15	15
97238	**UJB100**	LT5AU-100(M,F,FM)	102	45	20	24	16	5	15	15

No.	I	J (Coarse Thread)	K	L	M	N	O	P	Q	R	S	Weight (kg)
UJB75	5.5	M8X1.25	27	10	28.5	9	14	8.5	12	14	49	0.7
UJB100	5.5	M8X1.25	17	28.5	22.5	9	14	8.5	13	76	-	1.1

RoHS Compliant

No.E-775

Lock-Tight FA Machine Vises

- Parallel accuracy is within ± 0.01mm.
- Can be utilized even for multiple use.
- The workpiece is prevented from lifting up by anti-floating mechanism.
- The main body and stationary jaw have a one piece construction that maintains high rigidity.
- Sliding surfaces have been flame heat treated (HRC45) and offer excellent wear resistance.
- Has a large jaw depth, enabling secure clamping of tall workpieces.

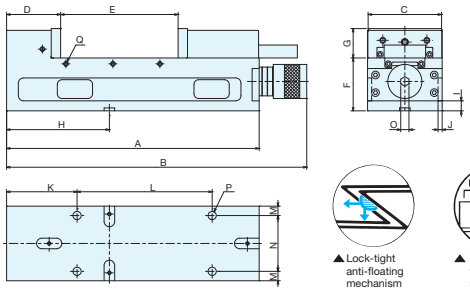

▲Lock-tight anti-floating mechanism

▲Lock-tight full multi-jaw system

▲Lock-tight hydraulic mechanism

Size Chart

No.	A	B	C	D	E	F	G	H	I	J	K	L	M	N	O	P	Q
LTFV-125H	430	511	125	92	0-200	90	50	175	17	7	120	230	16	95	14	14	M8
LTFV-150H	534	615	150	112	0-260	100	60	175	20	7	134	315	15	122	14	14	M8

Specifications

Order No.	No.	Jaw Width	Jaw Depth	Maximum Jaw Opening	Standard Guide Block Width	Clamping Force (kN)	Mass (kg)
110032	**LTFV-125H**	125	50	200	18	40	34
110033	**LTFV-150H**	150	60	260	18	40	52

Accuracy Standards
(Static Accuracy)

No.	Inspection Points (per 100 mm)	Former JIS Standard (O Grade)	Nabeya SPEC
1	Parallelism between bottom surface of main body and sliding surface	0.015	0.010
2	Perpendicularity between jaw plate and sliding surface	0.030	0.015
3	Perpendicularity between T-slot and jaw plate surface of stationary jaw side	0.015	0.015
4	Parallelism between T-slot and jaw plate surface of stationary jaw side; Applies to LTFV type	0.015	0.015
5	Parallelism between top surface of clamped test block and bottom surface of main body	0.020	0.015
6	Lift-up of top surface of clamped test block	0.030	0.015

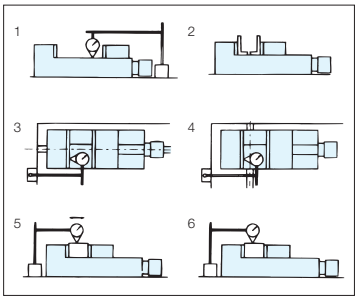

Accessories and Optional Parts (Refer to the Following Page)
Reference Pages

Guide block

P.136 ▶

Attachment clamp

P.135 ▶

RoHS Compliant

ERON®

No.E-158S

Precision Parallel Blocks 4 Pairs Sets

- The 4 faces excluding the end face have a ground finish, which are machined in pairs.
- S50C is hardened to HRC46 to 53, and offers high wear resistance.
- Comes in a durable wood storage case.
- Individual pieces are also available for sale.

By using high precision parallel blocks with high parallelism, you can perform precision machining while preventing lift-up of workpieces.

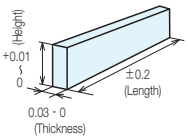

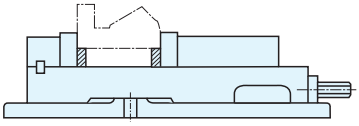

Specifications

Order No.	No.	Content of Set		Weight (kg)	
34597	HPA100SET	8×15×100(HP27),10×20×100(HP28) 10×25×100(HP29),15×35×100(HP30)	Contains 4 types of 2 pieces of each in the box	1.7	
34598	HPA125SET	8×15×125(HP31),10×20×125(HP32) 10×30×125(HP33),15×40×125(HP34)	Contains 4 types of 2 pieces of each	2.4	
01278	HPA150SET	15×20×150(HP2),15×30×150(HP3) 20×30×150(HP4),25×50×150(HP5)	Contains 4 types of 2 pieces of each	6.8	
00097	HPA200SET	10×20×200(HP22),15×20×200(HP23) 15×30×200(HP24),20×30×200(HP25) 25×50×200(HP26)	Contains 5 types of 2 pieces of each	9.8	

◆For top surface machining
Useful for machining of the top surfaces of thin plates in particular.

◆For machining through holes
Prevents interference of the cutting tool with the vise.

◆For setting-up small pieces
Useful for setting-up vises with a groove in the center.

◆For preventing damage to the vise
Prevents damage to the vise by falling workpieces.

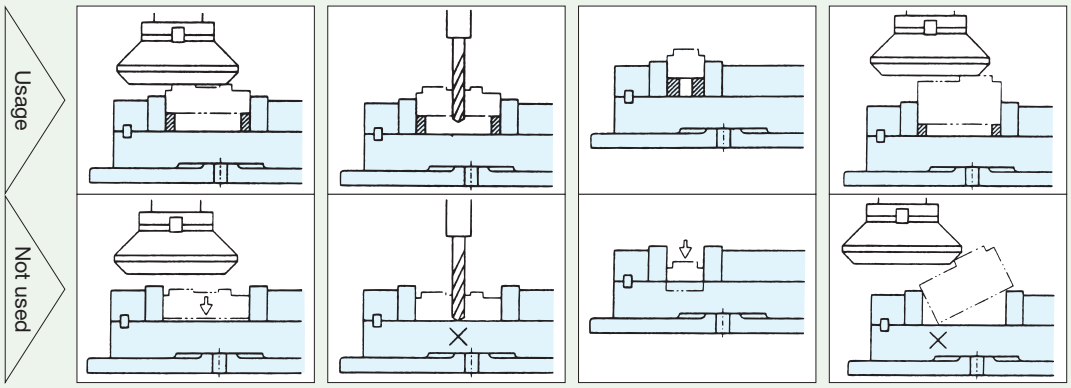

Reference Pages

Precision parallel block

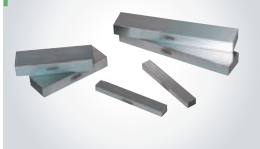

Base Elements
Clamp Units
Clamping Parts
Machine Vises
Drilling Vises
Vibration Isolation
Surface Plates and Measurement Instruments
Index

RoHS Compliant

ERON

No.E-158U

Precision Parallel Blocks

Material S50C

Heat Treatment HRC47 to 53 heat treatment

- Designed with a height that takes the jaw depth of the vise into account.
- Low profile is useful for machining through holes near workpiece end faces. (Blocks with steps in particular)
- 1 set of 2 pieces (difference in stamped pairs: 0.01).

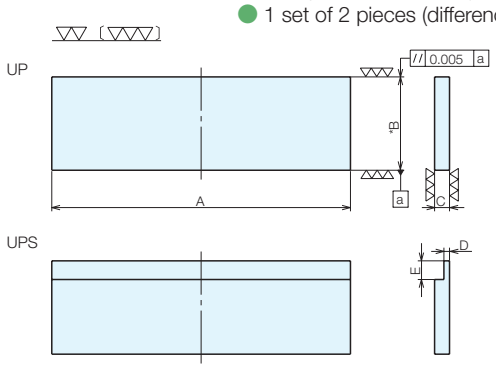

Specifications

Common Size			UP (No Step)				UPS (With Step)				
A	B	C	Order No.	No.	Weight (kg)		Order No.	No.	D	E	Weight (kg)
160	30	8	**55665**	**UP1630**	0.60		**55688**	**UPS1630**	3	10	0.47
160	35	8	**55666**	**UP1635**	0.70		**55689**	**UPS1635**	3	10	0.58
160	40	8	**55667**	**UP1640**	0.80		**55690**	**UPS1640**	3	10	0.67
160	45	8	**55668**	**UP1645**	0.90		**55691**	**UPS1645**	3	10	0.77
160	50	8	**55669**	**UP1650**	1.00		**55692**	**UPS1650**	3	10	0.87
160	51	8	**55670**	**UP1651**	1.03		**55693**	**UPS1651**	3	10	0.90
160	52	8	**55671**	**UP1652**	1.05		**55694**	**UPS1652**	3	10	0.92
160	53	8	**55672**	**UP1653**	1.07		**55695**	**UPS1653**	3	10	0.94
160	54	8	**55673**	**UP1654**	1.09		**55696**	**UPS1654**	3	10	0.96
160	55	8	**55674**	**UP1655**	1.10		**55697**	**UPS1655**	3	10	0.97
160	56	8	**55675**	**UP1656**	1.13		**55698**	**UPS1656**	3	10	1.02
160	57	8	**55676**	**UP1657**	1.15		**55699**	**UPS1657**	3	10	1.03
200	40	8	**55677**	**UP2140**	1.06		**55700**	**UPS2140**	3	10	0.90
200	45	8	**55678**	**UP2145**	1.19		**55701**	**UPS2145**	3	10	1.03
200	50	8	**55679**	**UP2150**	1.32		**55702**	**UPS2150**	3	10	1.15
200	55	8	**55680**	**UP2155**	1.46		**55703**	**UPS2155**	3	10	1.30
200	60	8	**55681**	**UP2160**	1.60		**55704**	**UPS2160**	3	10	1.44
200	61	8	**55682**	**UP2161**	1.62		**55705**	**UPS2161**	3	10	1.46
200	62	8	**55683**	**UP2162**	1.65		**55706**	**UPS2162**	3	10	1.49
200	63	8	**55684**	**UP2163**	1.67		**55707**	**UPS2163**	3	10	1.50
200	64	8	**55685**	**UP2164**	1.70		**55708**	**UPS2164**	3	10	1.54
200	65	8	**55686**	**UP2165**	1.73		**55709**	**UPS2165**	3	10	1.56
200	67	8	**55687**	**UP2167**	1.78		**55710**	**UPS2167**	3	10	1.62

Usage Examples

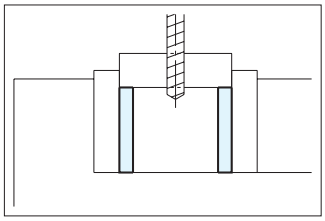

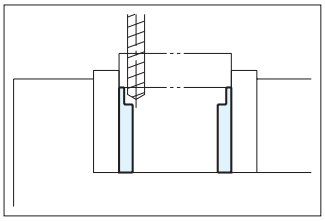

Base Elements
Clamp Units
Clamping Parts
Machine Vises
Drilling Vises
Vibration Isolation
Surface Plates and Measurement Instruments
Index

RoHS Compliant

No.E-275B

Machine Vise Series Accessories

Rotating Tables

LT-SV

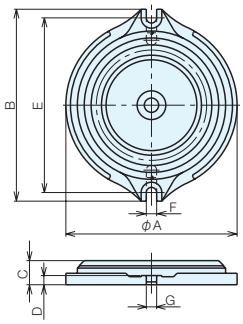

LTH3P-125SV

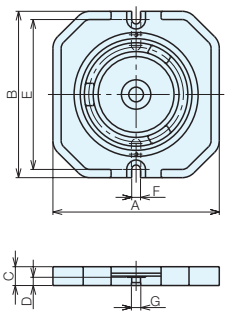

Specifications

Compatible Models	Order No.	No.	A	B	C	D	E	F	G	Weight (kg)
LT100M	**32182**	**LT100M-SV**	228	256	34	14	232	15	18	4.5
LT125M	**32183**	**LT125M-SV**	248	283	34	14	255	16	18	7
LT150M,LT150L,LTHPD150	**32184**	**LT150M-SV**	298	334	42	16	320	18	18	12
LT200M	**32185**	**LT200M-SV**	409	425	57	28	379	24	18	32
LTH3P-125	**02909**	**LTH3P-125SV**	270	283	34	14	255	15	16	12

RoHS Compliant

No.E-275B

Machine Vise Series Accessories

ERON®

Mounting Bolts

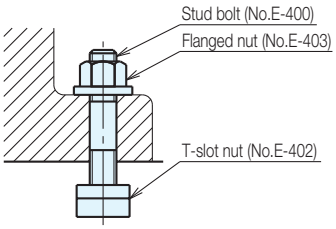

Specifications

(2 pieces per set)

Compatible Groove Width	Compatible Models	Order No.	No.	T-slot Nut	Flanged Nut	Stud Bolt	
12	LT100M	**35843**	**BTS-12A**	TNM1210	FNM0010	BM01075	
14	LT100M,LT125M,LT150M,LT150L,LTH3P-125,LTH3P-150S,LT-HPD150	**35844**	**BTS-14A**	TNM1412	FNM0012	BM01275	
16	LT100M,LT125M,LT150M,LT150L,LTH3P-125,LTH3P-150S,LT-HPD150	**35845**	**BTS-16A**	TNM1614	FNM0014	BM01475	
18	LT150M,LT200M,LT250M,LT150L,LTH3P-150S,LT-HPD150	**35846**	**BTS-18A**	TNM1816	FNM0016	BM16100	
18	LT100M,LT125M,LTH3P-125	**35847**	**BTS-18B**	TNM1814	FNM0014	BM01475	
20	LT200M,LT250M	**35849**	**BTS-20A**	TNM2018	FNM0018	BM18100	
20	LT150M,LT150L,LTH3P-150S	**35850**	**BTS-20B**	TNM2016	FNM0016	BM16100	
22	LT200M,LT250M	**35852**	**BTS-22A**	TNM2220	FNM0020	BM20100	

Base Elements
Clamp Units
Clamping Parts
Machine Vises
Drilling Vises
Vibration Isolation
Surface Plates and Measurement Instruments
Index

Attachment Clamps

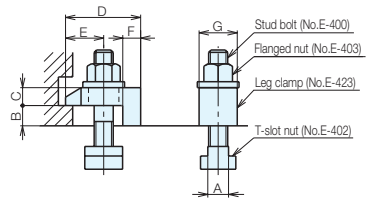

BCS-14B, CBCS-16B, C, G, HBCS-18B, C, F, G, H

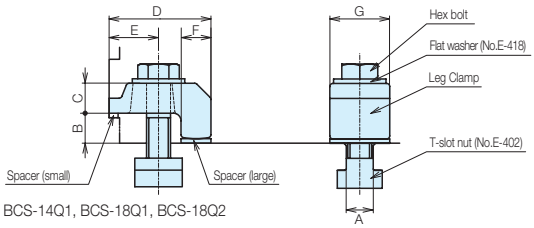

BCS-14Q1, BCS-18Q1, BCS-18Q2

Specifications

(2 pieces per set)

Compatible Groove Width	Compatible Models	Order No.	No.	A	B	C	D	E	F	G	Leg Clamp	T-Slot Nut	Flanged Nut	Stud Bolt
14	LTCV100(S,H,SH),LTCV125(S,H,SH), LTCV160(S,H,SH,TH),LTCV200(S,H,SH,TH), LTFV100Q,LT150MC,LTM150WL,LT5AU100(F,M,FM)	35854	BCS-14B	13.5	17	15	63	27-37	15	32	LCMC121	TNM1412	FNM0012	BM01275
14	LTFV75,LT100MC,LTM100WL,LTAW100,LT5AU-75(F,FM)	43967	BCS-14C	13.5	12	15	55	26-31	15	32	LCMC122	TNM1412	FNM0012	BM01275
14	LTFV75, LT5AU-75(F,FM)	97234	BCS-14Q1	13.5	12	20	63	23-38	15	32	Dedicated clamp & spacer	TNM1412K	Hex bolt M12×60 & flat washer WF12	
16	LTCV100(S,H,SH),LTCV125(S,H,SH), LTCV160(S,H,SH,TH),LTCV200(S,H,SH,TH),LTFV100Q, LTFV125Q,LTFH125Q,LT150MC,LTM150WL,LT5AU100(F,M,FM)	35856	BCS-16B	15.3	17	15	63	28-36	15	32	LCMC161	TNM1614	FNM0014	BM14100
16	LTCV100(S,H,SH),LTCV125(S,H,SH), LTCV160(S,H,SH,TH),LTCV200(S,H,SH,TH),LTFV100Q, LTFV125Q,LTFH125Q,LT150MC,LTM150WL,LT5AU100(F,M,FM)	35857	BCS-16C	15.3	17	15	95	41-71	15	32	LCMC162	TNM1614	FNM0014	BM14100
16	LTFV150Q,LTFH150Q,LTFV175Q,LTFH175Q	43968	BCS-16G	15.3	20	20	80	32-43	25	45	LCMC164	TNM1614	FNM0014	BM14100
16	LTFV75,LT100MC,LTM100WL,LTAW100	59333	BCS-16H	13.5	12	15	55	26-31	15	32	LCMC122	TNM1612	FNM0012	BM01275
18	LTCV100(S,H,SH),LTCV125(S,H,SH), LTCV160(S,H,SH,TH),LTCV200(S,H,SH,TH),LTFV100Q, LTFV125Q,LTFH125Q,LT150MC,LTFW100,LTM150WL	35862	BCS-18B	17	17	15	63	28-36	15	32	LCMC161	TNM1816	FNM0016	BM16100
18	LTCV100(S,H,SH),LTCV125(S,H,SH), LTCV160(S,H,SH,TH),LTCV200(S,H,SH,TH),LTFV100Q, LTFV125Q,LTFH125Q,LT150M,LTM150WL,LT5AU100(F,M,FM)	35863	BCS-18C	17	17	15	95	41-71	15	32	LCMC162	TNM1816	FNM0016	BM16100
18	LTFV150Q,LTFH150Q,LTFV175Q,LTFH175Q	43969	BCS-18G	17	20	20	80	32-43	25	45	LCMC164	TNM1816	FNM0016	BM16100
18	LTFV75,LT100MC,LTM100WL,LTAW100	59334	BCS-18H	17	12	15	55	26-31	15	32	LCMC122	TNM1812	FNM0012	BM01275
18	LTCV100(S,H,SH),LTCV125(S,H,SH), LTCV160(S,H,SH,TH),LTCV200(S,H,SH,TH), LTFV100Q,LTFV125Q,LTFH125Q,LT5AU100(F,M,FM),LTFV125H	86725	BCS-18Q1	17	17	20	68	25-33	20	40	Dedicated clamp and spacer	TNM1816K	Hex bolt M16×70 & flat washer WF16	
18	LTFV150Q,LTFH150Q,LTFV175Q,LTFH175Q,LTFV150H	86726	BCS-18Q2	17	20	20	68	25-33	20	40	Dedicated clamp and spacer	TNM1816K	Hex bolt M16×75 & flat washer WF16	

Base Elements
Clamp Units
Clamping Parts
Machine Vises
Drilling Vises
Vibration Isolation
Surface Plates and Measurement Instruments
Index

RoHS Compliant

No.E-275B

Machine Vise Series Accessories

ERON®

Guide Blocks

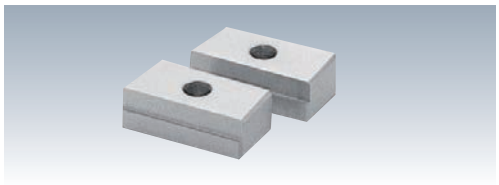

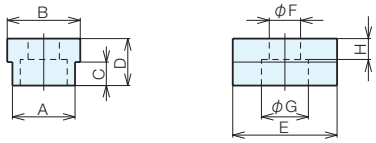

Specifications

(* 2 pieces per set, with mounting bolts. Material: S45C)

Compatible Groove Width	Compatible Models	Order No.	No.	A	B	C	D	E	F	G	H	Compatible Bolts
10	LTCV all models, LTFV & LTFH all models, LT-M, LT-MC, LT5AU-100 (M, F, FM), LT150L,LT-JV,LTM-WL/LTAW,LTH3P-150S, LT-HPD150, MSV all models, SV-80, PV-2, PV-3, TP	55958	LTGB10-18	10	18	6.5	11	24	7	11	4.5	M6
12	LTCV all models, LTFV & LTFH all models, LT-M, LT-MC, LT150L,LT-JV,LTM-WL/LTAW,LTH3P-150S, LT-HDP150, MSV all models, SV-80, PV-2, PV-3, TP	32122	LTGB12-18	12	18	6.5	11	24	7	11	4.5	M6
	LTH3P125	66311	LTGB12-16	12	16	5.5	10	24	7	11	3.5	M6
	ETO-TH type all models, SV-56, LT5AU-75 (F,FM),	66310	LTGB12-14	12	14	5.5	9	20	7	11	2.5	M6
14	LTCV all models, LTFV & LTFH all models, LT-M, LT-MC, LT5AU-100 (M, F, FM), LT150L,LT-JV,LTM-WL/LTAW,LTH3P-150S, LT-HDP150, MSV all models, SV-80, PV-2, PV-3, TP	32123	LTGB14-18	14	18	6.5	11	24	7	11	4.5	M6
	LTH3P125	43868	LTGB14-16	14	16	5.5	10	24	7	11	3.5	M6
	LTFV75, E-173 ETO-TH type all models, SV-56, LT5AU-75 (F,FM)	66312	LTGB14-14	14	14	-	9	20	7	11	2.5	M6
16	LTCV all models, LTFV&LTFH all models, LT-M, LT-MC, LT5AU-100 (M, F, FM), LT150L,LT-JV,LTM-WL/LTAW,LTH3P-150S, LT-HDP150, MSV all models, SV-80, PV-2, PV-3, TP	32124	LTGB16-18	16	18	6.5	11	24	7	11	4.5	M6
	LTH3P125	43869	LTGB16-16	16	16	-	10	24	7	11	3.5	M6
	LTFV75, E-173 ETO-TH type all models, SV-56, LT5AU-75 (F,FM),	66313	LTGB16-14	16	14	5.5	10	24	7	11	3.5	M6
18	LTCV all models, LTFV & LTFH all models, LT-M, LT-MC, LT5AU-100 (M, F, FM), LT150L,LT-JV,LTM-WL/LTAW,LTH3P-150S, LT-HDP150, MSV all models, SV-80, PV-2, PV-3, TP	32125	LTGB18-18	18	18	-	11	24	7	11	4.5	M6
	LTH3P125	43870	LTGB18-16	18	16	5.5	11	24	7	11	4.5	M6
	LTFV75, E-173 ETO-TH type all models, SV-56, LT5AU-75 (F,FM),	66314	LTGB18-14	18	14	5.5	11	24	7	11	4.5	M6
20	LTCV all models, LTFV&LTFH all models, LT-M, LT-MC, LT5AU-100 (M, F, FM), LT150L,LT-JV,LTM-WL/LTAW,LTH3P-150S, LT-HDP150, MSV all models, SV-80, PV-2, PV-3, TP	32133	LTGB20-18	20	18	6.5	12	24	7	11	5.5	M6
	LTH3P125	43871	LTGB20-16	20	16	6.5	12	24	7	11	5.5	M6
	LTFV75, E-173 ETO-TH type all models, SV-56, LT5AU-75 (F,FM),	66315	LTGB20-14	20	14	7.5	12	20	7	11	5.5	M6
22	LTCV all models, LTFV&LTFH all models, LT-M, LT-MC, LT5AU-100 (M, F, FM), LT150L,LT-JV,LTM-WL/LTAW,LTH3P-150S, LT-HDP150, MSV all models, SV-80, PV-2, PV-3, TP	32134	LTGB22-18	22	18	8.5	14	24	7	11	7.5	M6
	LTH3P125	43872	LTGB22-16	22	16	6.5	12	34	7	11	5.5	M6
	LTFV75, E-173 ETO-TH type all models, SV-56, LT5AU-75 (F,FM),	66316	LTGB22-14	22	14	9.5	14	20	7	11	7.5	M6
24	LTCV all models, LTFV&LTFH all models, LT-M, LT-MC, LT5AU-100 (M, F, FM), LT150L,LT-JV,LTM-WL/LTAW,LTH3P-150S, LT-HDP150, MSV all models, SV-80, PV-2, PV-3, TP	51959	LTGB24-18	24	18	10.5	16	24	7	11	9.5	M6
28	LTCV all models, LTFV&LTFH all models, LT-M, LT-MC, LT150L,LT-JV,LTM-WL/LTAW,LTH3P-150S, LT-HDP150, MSV all models, SV-80, PV-2, PV-3, TP	51960	LTGB28-18	28	18	10.5	16	24	7	11	9.5	M6

Base Elements
Clamp Units
Clamping Parts
Machine Vises
Drilling Vises
Vibration Isolation
Surface Plates and Measurement Instruments
Index

RoHS Compliant

No.E-275B

Machine Vise Series Accessories

ERON

Jaw plate

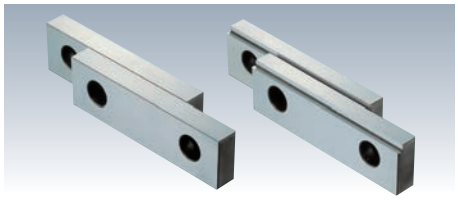

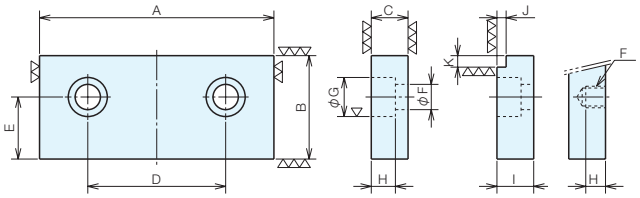

Step jaw plate: SJ LTFV75 only

Size Chart

Compatible Models	A	B	C	D	E	F	G	H	J	K	Compatible Bolts	I
LTCV100(S,H,SH),LT5AU-100F(M)	102	45	12	60	27	11	18	7	4	5	M10	16
LTCV125(S,H,SH)	125	50	12	75	30	11	18	7	4	5	M10	16
LTCV160(S,H,SH,TH)	160	60	12	90	35	11	18	7	5	6	M10	19
LTCV200(S,H,SH,TH)	200	70	12	130	40	11	18	7	5	6	M10	19
LTFV75	76	32	14	46	18	M8	-	-	4	5	M8	14
LTFV100Q	102	45	16	60	27	11	18	10.5	4	5	M10	16
LTFV/LTFH125Q	125	50	16	75	30	11	18	10.5	4	5	M10	16
LTFV/LTFH150Q	150	60	19	90	35	13	19	12.5	5	6	M12	19
LTFV/LTFH175Q	175	70	19	90	45	13	19	12.5	5	6	M12	19
LT630JV	160	75	19	85	35	13	19	12.5	5	6	M12	19
LT100M,LT100MC,LT100SP,LTM100WL	101	32	14	60	18	9	14	8.5	3.5	4	M8	14
LT125M,LT125SP	126	38	19	77	21	13	19	12.5	3.5	4	M12	19
LT150M,LT150MC,LT-HPD150	151	44.2	19	100	24	13	19	12.5	4.5	5	M12	19
LT200M	202	57	29	119	31	17	25	17	5.5	6	M16	29
LT250M	253	75.5	34	140	41	17	25	17	5.5	6	M16	34
LT150L,LTM150WL	151	44.2	14	100	24	11	18	10.5	4.5	5	M10	14
LTH3P-125	129	54	14	80	25	11	18	10.5	6	7	M10	19
LTH3P-150S	156	57	14	90	25	11	18	10.5	6	7	M10	14
LT5AU-75F(M)	75	32	14	32	18	9	14	8.5	-	-	M8	-

Specifications

(2 pieces per set)

Compatible Models	Standard jaw plate			Step jaw plate		
	Order No.	No.		Order No.	No.	
LTCV100(S,H,SH),LT5AU-100F(M)	78206	LTCV100-JA		30336	LTF-100SJ	
LTCV125(S,H,SH)	78207	LTCV125-JA		30337	LTF-125SJ	
LTCV160(S,H,SH,TH)	78208	LTCV160-JA		78209	LTCV160-SJ	
LTCV200(S,H,SH,TH)	84582	LTCV200-JA		84583	LTCV200-SJ	
LTFV75	62537	LTF-75JA		62538	LTF-75SJ	
LTFV100Q	30332	LTF-100JA		30336	LTF-100SJ	
LTFV/LTFH125Q	30333	LTF-125JA		30337	LTF-125SJ	
LTFV/LTFH150Q	30334	LTF-150JA		30338	LTF-150SJ	
LTFV/LTFH175Q	30335	LTF-175JA		30339	LTF-175SJ	
LT630JV	19772	LT630JV-JA		19911	LT630JV-SJ	
LT100M,LT100MC,LT100SP,LTM100WL	32161	LT100M-JA		32162	LT100M-SJ	
LT125M,LT125SP	32163	LT125M-JA		32164	LT125M-SJ	
LT150M,LT150MC,LT-HPD150	32165	LT150M-JA		32166	LT150M-SJ	
LT200M	32167	LT200M-JA		32168	LT200M-SJ	
LT250M	32169	LT250M-JA		32170	LT250M-SJ	
LT150L,LTM150WL	55470	LT150L-JA		55471	LT150L-SJ	
LTH3P-125	10840	LTH3P-125JA		10772	LTH3P-125SJ	
LTH3P-150S	69385	LTH3P150S-JA		69386	LTH3P150S-SJ	
LT5AU-75F(M)	93022	LT5AU-75JA-32		-	-	

Usage Examples

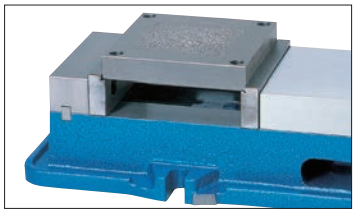

Machine Vises

A machine vise is a highly general-purpose jig that combines:

(1) A locating function for the X, Y, and Z axes of the workpiece
(2) A clamping (mechanical type, hydraulic type) function
(3) A function for attaching to and locating the machine table

- When used with a vertical machining center or milling machine, the reference for the workpiece is
  X-axis direction: A locating element such as a locating workstop
  Y-axis direction: Jaw plate face on the stationary jaw side of the vise
  Z-axis direction: Sliding surface of the vise

- In a precision vise, the precision of the parallelism of the following is high:
  jaw plate surface of stationary jaw side from the machine T-slot in the X-axis direction
  sliding surface from the machine table surface in the Z-axis direction

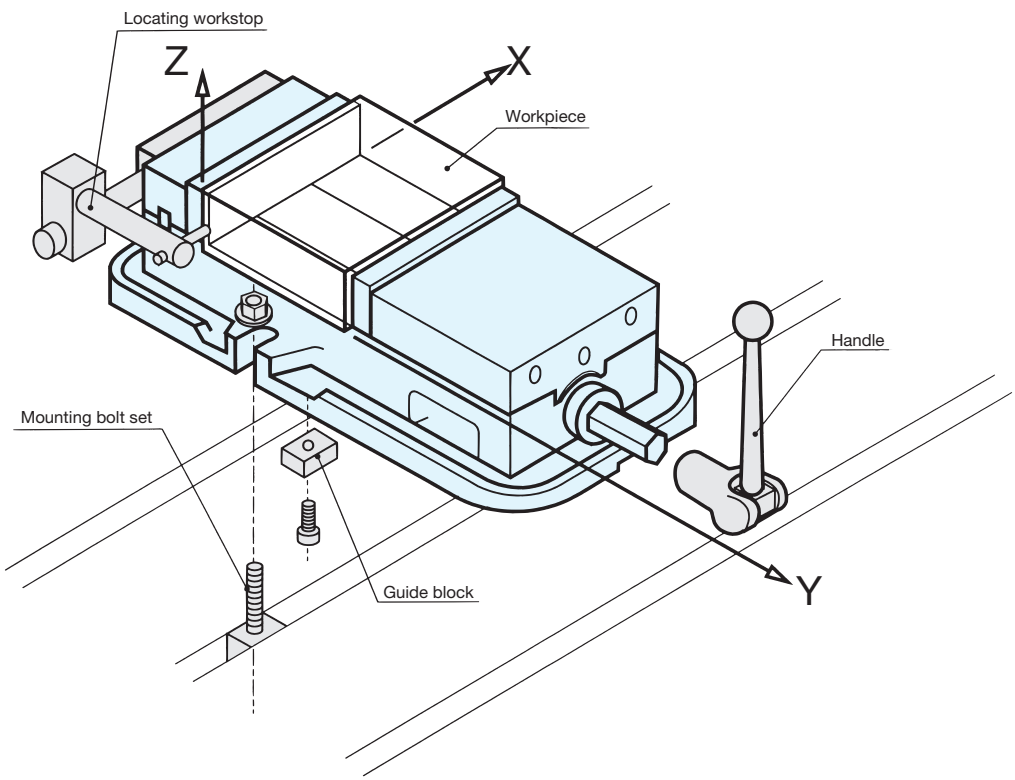

Base Elements
Clamp Units
Clamping Parts
Machine Vises
Drilling Vises
Vibration Isolation
Surface Plates and Measurement Instruments
Index

Selecting Machine Vises

1. Workpiece size

(1)Selection by "jaw opening":

You need to select a vise that has a jaw opening that is able to clamp the workpiece. In general precision vises, the jaw opening is similar to the jaw width. However, for some models, a "type with large jaw openings" or "type where the jaw opening can be increased" by replacing the jaw plates are also available.

Example: Jaw width 150 m/m vise

●General precision vise

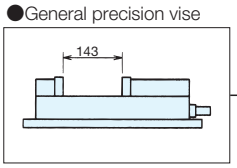

Lock-tight precision machine vise
LT150M

●Large jaw opening type

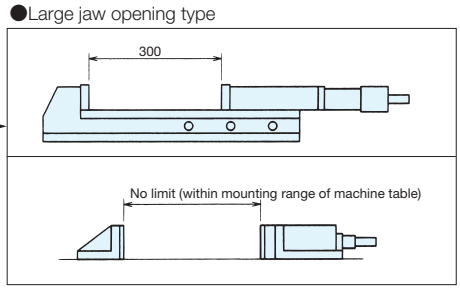

Lock-tight hydraulic machine vise MK-III
LTH3P-150S

Two piece vise
TP150-6

●Jaw opening can be increased by replacing the jaw plates
If the jaw plate is mounted upside down, the jaw plate will protrude by a long distance.

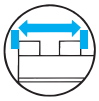

▲ Lock-tight jaw opening can be increased

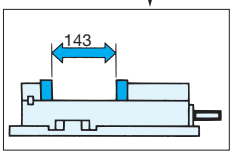

Standard position

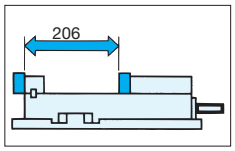

Moving the stationary side jaw plate

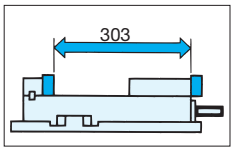

Moving the sliding jaw side jaw plate

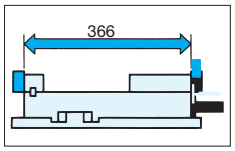

Moving both the stationary side and sliding jaw side

* This symbol is displayed on applicable products in this catalog.

(Warning) The thickness of the workpiece and limits on the clamping force need to be considered.

(2) Selection by "jaw width":

In workpieces that greatly exceed the jaw width (long workpieces, etc.), vibrations (chattering) may occur in the workpiece during machining or the workpiece may fall out. You need to select a vise with a jaw width suitable for the workpiece. For long workpieces, it is useful to arrange several multi-jaw specification products in parallel with the height to the vise sliding surface (A) and the distance between guide block and jaw plate surface (B) within 0.01.

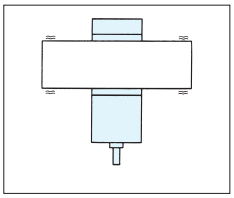

● Multi-jaw specifications

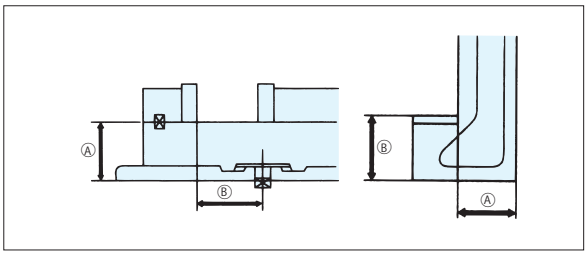

A and B dimensions aligned within 0.01 with multiple units.

When not parallel

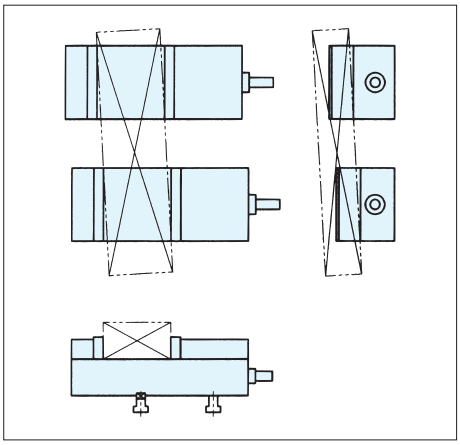

MEMO

Base Elements
Clamp Units
Clamping Parts
Machine Vises
Drilling Vises
Vibration Isolation
Surface Plates and Measurement Instruments
Index

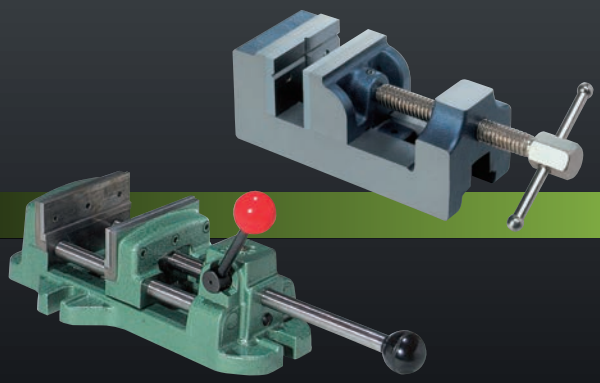

Drill Press Vises

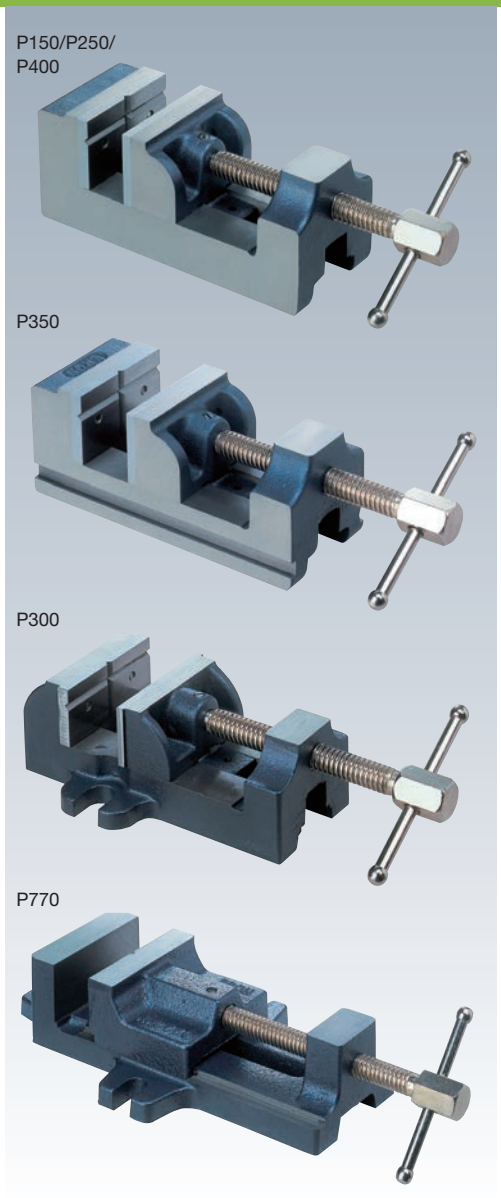

RoHS Compliant

ERON

No.E-117

Drill Press Vises

- All faces are finished except the handle end face. (P150, P250, P350, P400)
- Top faces and side faces have a ground finish for high accuracy.
- Jaw plates are fitted to both the main body and movable body. (Excluding the P770)
- The P350, P400, P300, and P770 use an Acme thread for the feed screw, allowing for powerful clamping.
- The handle lever stop ball is cold headed, and absolutely will not fall off.

P150 *P350
P400 P250

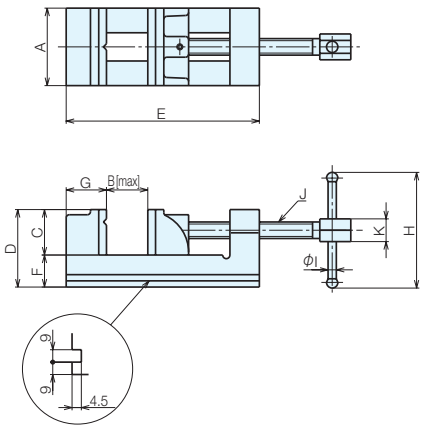

* The clamping groove is fitted to the side face only for the P350.

P300

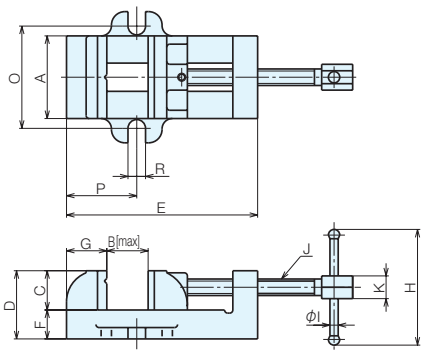

P770

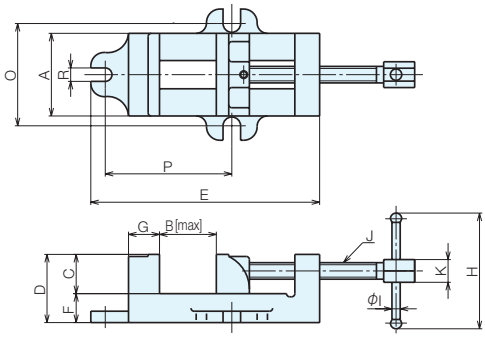

Base Elements
Clamp Units
Clamping Parts
Machine Vises
Drilling Vises
Vibration Isolation
Surface Plates and Measurement Instruments
Index

Size Chart

No.	A	B	C	D	E	F	G
P150	38	38	25	47	108	22	25.5
P250	62	64	38	67	158	29	37
P350	75	79	45	76	186	31	38.5
P400	101.5	104	45	83	238	38	48
P300	81	84	38	66	183	28	37.5
P770	94	105	42.5	66	273	23.5	24

No.	H	I	J	K	O	P	R
P150	46	5	W3/8 16 threads per inch	ϕ12	-	-	-
P250	97	8	W1/2 12 threads per inch	ϕ19	-	-	-
P350	114	8	TW16 8 threads per inch	Hex 22	-	-	-
P400	114	8	TW16 8 threads per inch	Hex 22	-	-	-
P300	114	8	TW16 8 threads per inch	Hex 22	101	66.5	17
P770	114	8	TW16 8 threads per inch	Hex 22	127	127	13

Specifications

Order No.	No.	Jaw Width	Jaw Depth	Jaw Opening	Weight (kg)	
00079	**P150**	38	25	38	0.8	
00493	**P250**	62	38	64	2.6	
00494	**P350**	75	45	79	4.4	
00495	**P400**	101.5	45	104	7.7	
00499	**P300**	81	38	84	3.9	
00500	**P770**	94	42.5	105	5.2	

Accessories

Jaw plates (2 pieces per set)

Compatible Models	Order No.	No.	
P150,P150A	**30959**	**P150-JA**	
P250,P250A,P250AS	**30960**	**P250-JA**	
P350,P350A,P350AS	**30962**	**P350-JA**	
P400,P400A,P400AS	**30963**	**P400-JA**	
P300	**30961**	**P300-JA**	

Back plate

Compatible Models	Order No.	No.	
P150,P150A	**43915**	**P150-BP**	
P250,P250A,P250AS,P300	**43916**	**P250-BP**	
P350,P350A,P350AS	**43917**	**P350-BP**	
P400,P400A,P400AS,P770	**43918**	**P400-BP**	

Spindle

Compatible Models	Order No.	No.	
P150	**43909**	**P150 -SP**	
P150A	**43910**	**P150A-SP**	
P250	**43911**	**P250 -SP**	
P250A,P250AS	**43912**	**P250A-SP**	
P350	**46805**	**P350 -SP**	
P350A,P350AS,P400,P770	**43913**	**P400 -SP**	
P400A,P400AS	**43914**	**P400A-SP**	

Base Elements
Clamp Units
Clamping Parts
Machine Vises
Drilling Vises
Vibration Isolation
Surface Plates and Measurement Instruments
Index

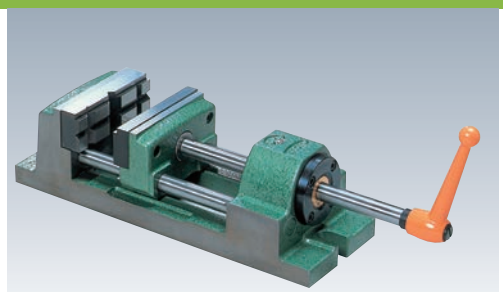

Can be used with one hand on either left or right side.

RoHS Compliant

ERON®

No.E-350

Uni Lever Action Vises

- Increased efficiency with new mechanism.
- Easily operated using one hand.
- Fitted with custom-made jaw plates, which are useful for clamping round bars, thin parts, etc.
- For use with drilling machines.

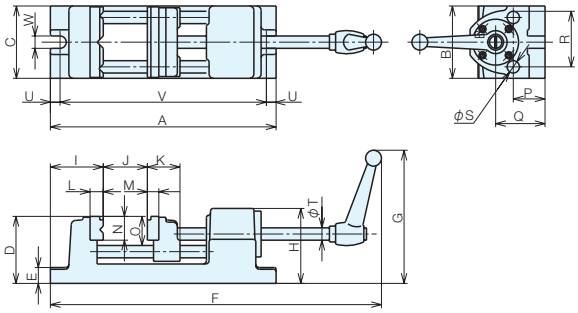

Size Chart

No.	A	B	C	D	E	F	G	H	I	J	K
UTS 75-3	256	80	82	76	18	325.5-405.5	151	85	60	80	37
UTS100-4	313	106	108	89	22	391.5-504.5	140	94	74.5	113	40
UTS125-5	370	131	133	95	24	434.5-569.5	161	103	89	135	47

No.	L	M	N	O	P	Q	R	S	T	U	V	W
UTS 75-3	15	13	27	33	36	56	56	14	14	11	234	14
UTS100-4	20	16	36	41.25	40	60	70	15.5	15.5	17	279	14
UTS125-5	20	16	36	41.5	41.5	66	85	22	17	19	332	16

Specifications

Order No.	No.	Jaw Width	Jaw Depth	Jaw Opening	Clamping Force (kN)	Weight (kg)	
03203	**UTS 75-3**	80	33	80	3.5	5.0	
00379	**UTS100-4**	106	41	113	3.5	9.2	
03204	**UTS125-5**	131	45	135	3.5	14.0	

Stationary Jaw Plate

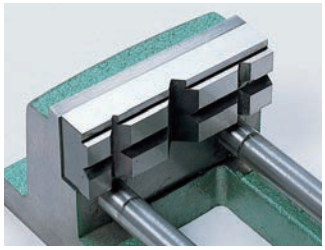

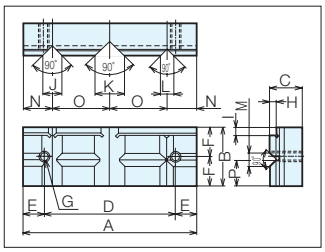

Sliding jaw plate

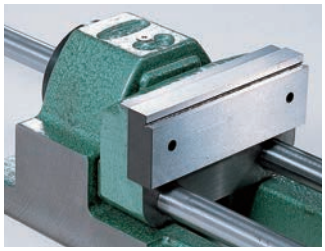

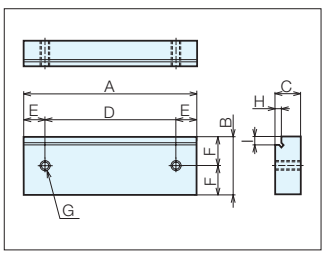

Jaw Plate Size Chart

No.	A	B	C	D
UTS 75-3	80	27	15	47
UTS100-4	106	36	20	80
UTS125-5	131	36	20	100

E	F	G	H	I	J
16.5	13.5	M5	4	4	10
13	18	M6	4	5	12
15.5	18	M6	4	5	13

K	L	M	N	O	P
14	8	8	10	30	12
18	8	8	18	35	16
20	9	9	20.5	45	16

Base Elements
Clamp Units
Clamping Parts
Machine Vises
Drilling Vises
Vibration Isolation
Surface Plates and Measurement Instruments
Index

Parts Detail

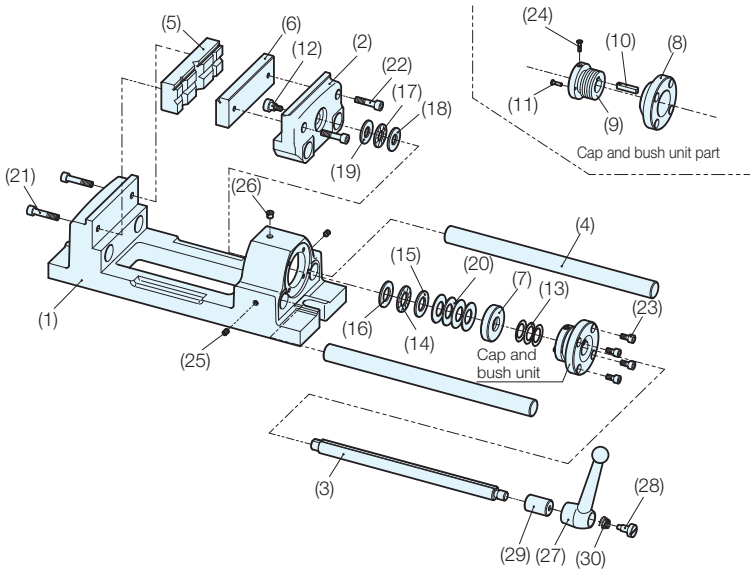

No.	Part name	Material	Quantity
(1)	Main body	FC250	1
(2)	Sliding jaw	FC250	1
(3)	Center bar	S45C	1
(4)	Guide bar	S45C	2
(5)	Prism jaw for main body	S45C	1
(6)	Prism jaw for Sliding jaw	S45C	1
(7)	Hold ring	SCM435	1
(8)	Cap (female screw)	S45C	1
(9)	Bush (male screw)	PBB2-H	1
(10)	Key	S45C	1
(11)	Bush pin	S45C	1
(12)	Center bar retainer bolt	SCM435	1
(13)	Pressure adjusting conical spring washer	SAE1060	3
(14)	Thrust needle bearing	-	1
(15)	Thrust washer	-	1
(16)	//	-	1
(17)	Thrust needle bearing	-	1
(18)	Thrust washer	-	1
(19)	//	-	1
(20)	Conical spring washer	SK3	4
(21)	Jaw plate retainer bolt (main body)	SCM435	2
(22)	// (Sliding jaw)	SCM435	2
(23)	Female screw retainer bolt	SCM435	4
(24)	Key set screw	SS400	1
(25)	Guide bar set screw	SCM435	2
(26)	Oil cap	BS chrome plating	1
(27)	Handle (main body)	ADC10	1
(28)	Handle retainer bolt	S45C	1
(29)	Spline bush	S45C	1
(30)	Cone spring	SK5	1

Accessories

Center bar (Parts No. (3))

Compatible Models	Order No.	No.	
UTS 75-3	**43893**	**UTS 75-CB**	
UTS100-4	**43894**	**UTS100-CB**	
UTS125-5	**43895**	**UTS125-CB**	

Jaw plates (2 pieces per set) (Parts No. (5) and (6))

Compatible Models	Order No.	No.	
UTS 75-3	**19659**	**UTS 75-JA**	
UTS100-4	**19660**	**UTS100-JA**	
UTS125-5	**19661**	**UTS125-JA**	

Cap and bush unit (Parts No. (8), (9), (10), (11), (24) single unit)

Compatible Models	Order No.	No.	
UTS 75-3	**115647**	**UTS 75-CBA**	
UTS100-4	**115648**	**UTS100-CBA**	
UTS125-5	**115649**	**UTS125-CBA**	

Handle set (Parts No. (27) to (30))

Compatible Models	Order No.	No.	
All models	**43908**	**UTS-HN**	

Guide bar (1 piece) (Parts No. (4))

Compatible Models	Order No.	No.	
UTS 75-3	**43896**	**UTS 75-GB**	
UTS100-4	**43897**	**UTS100-GB**	
UTS125-5	**43898**	**UTS125-GB**	

Hold ring (Parts No. (7))

Compatible Models	Order No.	No.	
UTS 75-3	**43899**	**UTS 75-HR**	
UTS100-4	**43900**	**UTS100-HR**	
UTS125-5	**43901**	**UTS125-HR**	

Oil cap (Parts No. (26))

Compatible Models	Order No.	No.	
All models	**10045**	**OCP-1/4**	

EVS type

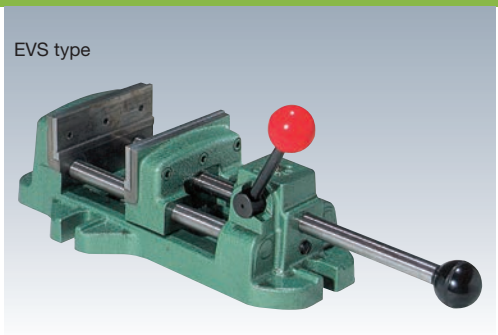

EPA type

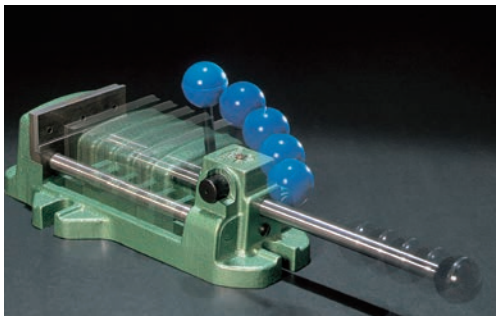

Speedy opening and closing using the cam lock mechanism!

RoHS Compliant

ERON®

No.E-250

Quick Action Drill Press Vises

- ERON® Quick Action Drill Press Vises are new types of drilling vises that employ a cam lock mechanism.
- The time taken to clamp the workpiece can be reduced by 50% compared to screw type vises.
- Optimal for drilling machine work.
- The main components are hardened and have a ground finish, offering high accuracy and long life.

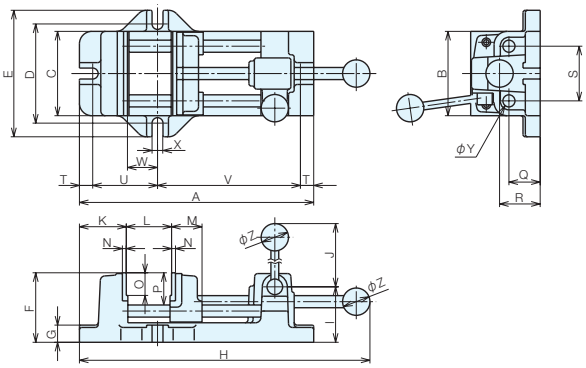

Size Chart

No.	A	B	C	D	E	F	G	H	I	J	K
EVS 75-3 (EPA 75-3)	238	82	80	104	122	76	18	277.5-357.5	56	113	48
EVS100-4 (EPA100-4)	300	108	108	128	162	89	22	352-462	71	113	60
EVS150-6 (EPA150-6)	374	156	155	187	225	99	22	433-579	80.5	124.5	73
EVS200-8	454	207	205	234	274	114	25	407-703	95	139	85

No.	L	M	N	O	P	Q	R	S	T	U	V	W	X	Y	Z
EVS 75-3 (EPA 75-3)	4-78	40	5	19	37.75	32	38	56	15	83	130	50	13	12.5	35
EVS100-4 (EPA100-4)	4-120	41	5	29	41.25	40	55	70	17	83	182	40	14	15.5	35
EVS150-6 (EPA150-6)	4-160	44	5	29	49.5	40	54	108	19	122	221	68	18	19	35
EVS200-8	4-210	51	5	29	51.5	50	69	152	22	150	260	87	18	25	40

Specifications

Order No.	No.	Jaw Width	Jaw Depth	Jaw Opening	Pumping	Clamping Force (kN)	Weight (kg)
00514	**EVS 75-3**	82	38	78	No	5	4.5
00515	**EVS100-4**	108	40	120	No	5	8.3
00516	**EVS150-6**	156	50	160	No	6.5	14.0
00517	**EVS200-8**	207	50	205	No	7	23.0
00518	**EPA 75-3**	82	38	78	Yes	5	4.5
00519	**EPA100-4**	108	40	120	Yes	5	8.3
00520	**EPA150-6**	156	50	160	Yes	6.5	14.0

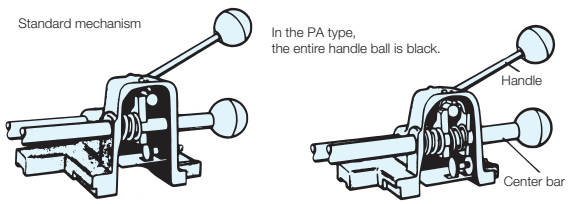

The PA type moves by "pumping" (inchworm motion). The center bar advances by approximately 1 mm for each revolution of the handle. This can fix irregular shaped objects and compressible objects such as wood and plastic.

Reference Pages

Quick lock

Base Elements
Clamp Units
Clamping Parts
Machine Vises
Drilling Vises
Vibration Isolation
Surface Plates and Measurement Instruments
Index

ETS type

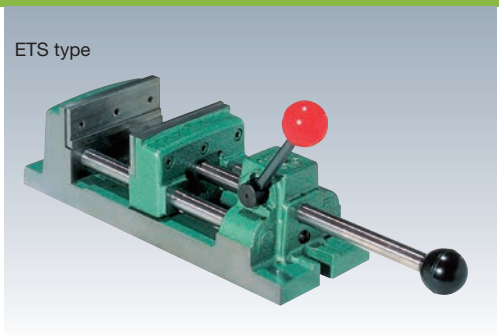

ETPA type

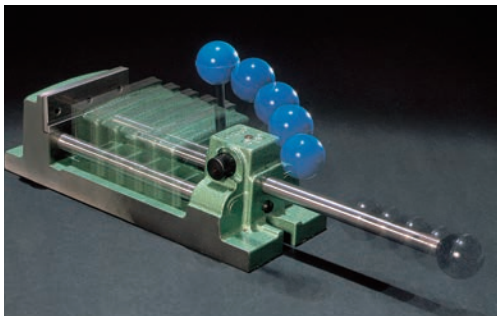

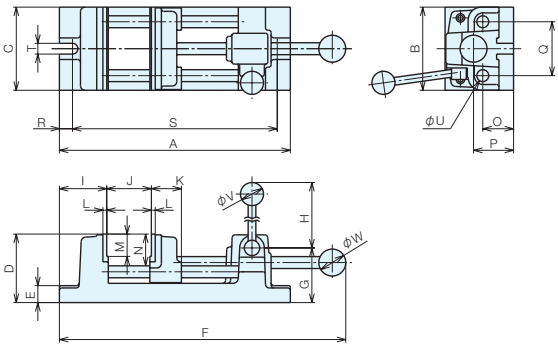

Size Chart

No.	A	B	C	D	E	F	G	H	I	J
ETS75-3 (ETPA75-3)	238	79	82	76	18	277.5-357.5	56	113	48	4-78
ETS100-4 (ETPA100-4)	300	105	108	89	22	352-462	71	113	61.5	4-120

No.	K	L	M	N	O	P	Q	R	S	T	U	V	W
ETS75-3 (ETPA75-3)	33	5	19	37.75	32	38	56	15	206	13	12.5	25	25
ETS100-4 (ETPA100-4)	39	5	29	41.25	40	52	70	17	266	14	15.5	30	35

Specifications

Order No.	No.	Jaw Width	Jaw Depth	Jaw Opening	Pumping	Clamping Force (kN)	Weight (kg)
00522	**ETS 75-3**	75	31	76	No	5	4.5
00523	**ETS 100-4**	100	33	119	No	5	8.2
00524	**ETPA 75-3**	75	31	76	Yes	5	4.5
00525	**ETPA100-4**	100	33	119	Yes	5	8.2

Parts Detail (EVS, EPA, ETS, ETPA)

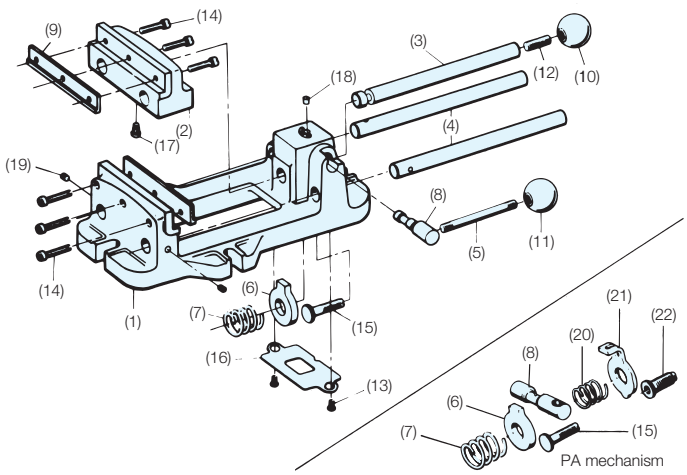

No.	Part Name	Number Used
(1)	Main body	1
(2)	Sliding jaw	1
(3)	Center bar	1
(4)	Guide bar	2
(5)	Handle	1
(6)	Locking ring	1
(7)	Spring	1
(8)	Crank	1
(9)	Jaw plate	2
(10)	Knob (black)	1
(11)	Knob (red) (black)	1
(12)	Stud	1
(13)	Set screw for retainer plate	2
(14)	Set screw for jaw plate	6
(15)	Adjustment bolt	1
(16)	Retainer plate	1
(17)	Center set screw	1
(18)	Oil cap with ball	1
(19)	Set screw for guide bar	2
(20)	PA spring	1
(21)	PA feed plate	1
(22)	PA adjustment screw	1

RoHS Compliant

No.E-250

Quick Action Drill Press Vises

ERON®

Accessories

Center bar (1 piece) (Parts No. (3))

Compatible Models	Order No.	No.	
(EVS,ETS,EPA,ETPA)- 75-3	32975	EVS 75-CB	
(EVS,ETS,EPA,ETPA)-100-4	32976	EVS100-CB	
(EVS,EPA)-150-6	32977	EVS150-CB	
EVS200-8	32978	EVS200-CB	

Guide bar (1 piece) (Parts No. (4))

Compatible Models	Order No.	No.	
(EVS,ETS,EPA,ETPA)- 75-3	32979	EVS 75-GB	
(EVS,ETS,EPA,ETPA)-100-4	32980	EVS100-GB	
(EVS,EPA)-150-6	32981	EVS150-GB	
EVS200-8	32982	EVS200-GB	

Handle set (Parts No. (5))

Compatible Models	Order No.	No.	
(EVS,EPA)-75-3, (EVS,EPA,ETS,ETPA)-100-4	32983	EVS 75-HN	
(ETS,ETPA)-75-3	32984	ETS 75-HN	
(EVS,EPA)-150-6	32986	EVS150-HN	
EVS200-8	32987	EVS200-HN	

Locking ring (Parts No. (6))

Compatible Models	Order No.	No.	
(EVS,ETS,EPA,ETPA)- 75-3	32988	EVS 75-LR	
(EVS,ETS,EPA,ETPA)-100-4	32989	EVS100-LR	
(EVS,EPA)-150-6	32990	EVS150-LR	
EVS200-8	32991	EVS200-LR	

Spring (Parts No. (7))

Compatible Models	Order No.	No.	
(EVS,ETS,EPA,ETPA)-(75-3,100-4)	32992	EVS 75-SPR	
(EVS,EPA)-150-6	32993	EVS150-SPR	
EVS-200-8	32994	EVS200-SPR	

Crank (Parts No. (8))

Compatible Models	Order No.	No.	
(EVS,EPA)-(75-3,100-4)	32995	EVS 75-CR	
(ETS,ETPA)-75-3	32996	ETS 75-CR	
(ETS,ETPA)-100-4	32999	ETS 100-CR	
(EVS,EPA)-150-6	33001	EVS 150-CR	
EVS 200-8	41960	EVS 200-CR	

Adjustment bolt (Parts No. (15))

Compatible Models	Order No.	No.	
(EVS,ETS)-(75-3,100-4)	41973	EVS 75-AJ	
(EPA,ETPA)-(75-3,100-4)	41974	EPA 75-AJ	
EVS-(150-6,200-8)	41975	EVS150-AJ	
EPA150-6	41976	EPA150-AJ	

Jaw plates (2 pieces per set) (Parts No. (9))

Compatible Models	Order No.	No.	
(EVS,EPA)- 75-3	00012	EVS 75-JA	
(ETS,ETPA)- 75-3	30968	ETS 75-JA	
(EVS,EPA)-100-4	00011	EVS100-JA	
(EVS,ETPA)-100-4	30969	ETS100-JA	
(EVS,EPA)-150-6	00003	EVS150-JA	
EVS200-8	00013	EVS200-JA	

Knob (Black: BK) (Parts No. (10))

Compatible Models	Order No.	No.	
(EVS,EPA)- 75-3	41961	EVS 75-NB-BK	
(ETS,ETPA)- 75-3	41962	ETS 75-NB-BK	
(EVS,EPA)-(100-4,150-6)	41963	EVS100-NB-BK	
(ETS,ETPA)-100-4	41964	ETS100-NB-BK	
EVS200-8	41965	EVS200-NB-BK	

Knob (black: BK, red: R) (Parts No. (11))

Compatible Models	Order No.	No.	
EVS-(75-3,100-4,150-6)	41966	EVS 75-NB-R	
EPA-(75-3,100-4,150-6)	41963	EVS100-NB-BK	
ETS 75-3	41967	ETS 75-NB-R	
ETPA- 75-3	41962	ETS 75-NB-BK	
ETS100-4	41968	ETS100-NB-R	
ETPA-100-4	41964	ETS100-NB-BK	
EVS200-8	41969	EVS200-NB-R	

Retainer plate (Parts No. (16))

Compatible Models	Order No.	No.	
(EVS,EPA,ETS,ETPA)-(75-3,100-4)	41977	EVS 75-TP	
(EVS,EPA)-150-6	41979	EVS150-TP	
EVS200-8	41980	EVS200-TP	

Oil cap (Parts No. (18))

Compatible Models	Order No.	No.	
All models	41981	OCP-1/4	

PA spring (Parts No. (20))

Compatible Models	Order No.	No.	
(EPA,ETPA)- 75-3	41982	EPA 75-SPR-P	
(EPA,ETPA)-100-4	41983	EPA100-SPR-P	
EPA-150-6	41984	EPA150-SPR-P	

PA feed plate (Parts No. (21))

Compatible Models	Order No.	No.	
(EPA,ETPA)- 75-3	41987	EPA 75-OP-P	
(EPA,ETPA)-100-4	41988	EPA100-OP-P	
EPA150-6	41989	EPA150-OP-P	

PA adjustment screw (Parts No. (22))

Compatible Models	Order No.	No.	
(EPA,ETPA)-(75-3,100-4)	41985	EPA 75-AJ-P	
EPA150-6	41986	EPA150-AJ-P	

Base Elements
Clamp Units
Clamping Parts
Machine Vises
Drilling Vises
Vibration Isolation
Surface Plates and Measurement Instruments
Index

Vibration Isolation

Vibration Isolation Products

Selection Guide

Before Selecting

STEP 1 Confirm the device weight

- Investigate the weight of the device for which to eliminate the vibrations.
- For machine tools, you should also add the weight of the workpiece being machined, and for measuring instruments, you should also add the weight of the object being measured.

STEP 2 Calculate the load weight

- The load weight is the weight per support point.
  Calculated from [Device weight ÷ Number of support points].
- If you are using a pad or plate type, you should also check the size of the support points (size of the legs of the device, etc.)

STEP 3 Check the vibration frequency

- Estimate the vibration frequency of the device for which to eliminate vibrations.
  The vibration frequency is estimated from [number of vibration (rpm) of device for which to eliminate vibrations ÷ 60 (seconds)]. If estimation is difficult, measure using a vibration measuring.

  Note down the values calculated in the preparation up to this point.
  Load weight = (kg) ... (1) Vibration frequency = (Hz) ... (2)

Selecting the Vibration Isolation Products

STEP 1 Narrow down based on the resonant frequency

- The resonant frequency is the natural frequency of the vibration isolation product.
  The characteristics graph shows the vibration frequency range and load weight for which vibration isolation is effective.
  You should select vibration isolation products that have a resonant frequency of 1/2 (0.5 times) or less of the vibration frequency (2).
  Guide to resonant frequency = [vibration frequency (2) × 0.5] = (Hz) ... (3)

STEP 2 Narrow down by load weight

- The calculated load weight (1) gives the vibration isolation products for the selection candidates.

STEP 3 Select the vibration isolation products

- Select the vibration isolation products from the area that satisfies the conditions of both STEP 1 and STEP 2 in the characteristics graph.

  * If you select a vibration isolation product that is much lighter than the load weight, it may not produce a vibration isolation effect.

Base Elements
Clamp Units
Clamping Parts
Machine Vises
Drilling Vises
Vibration Isolation
Surface Plates and Measurement Instruments
Index

Selection Examples

To eliminate the vibrations from a pump at a speed of 1,800 rpm
with a load of 5 kg on each mount

STEP 1 Narrow down based on the resonant frequency

- The vibration frequency generated by the pump is 1,800 rpm ÷ 60 seconds = 30 Hz.
  Select mounts that have a resonant frequency of 30 Hz ÷ 2 = 15 Hz or less.

STEP 2 Narrow down by load weight

- The load weight on each mount is 5 kg.

STEP 3 Select the vibration isolation products

- Select the vibration isolation products from the area that satisfies the conditions of both STEP 1 and STEP 2 in the following characteristics graph.
- In this case, the following 2 products are matches.
  - BBL25D013 (resonant frequency approx. 13 Hz with 5 kg load)
  - BBL35D007 (resonant frequency approx. 11 Hz with 5 kg load)

Characteristics graph

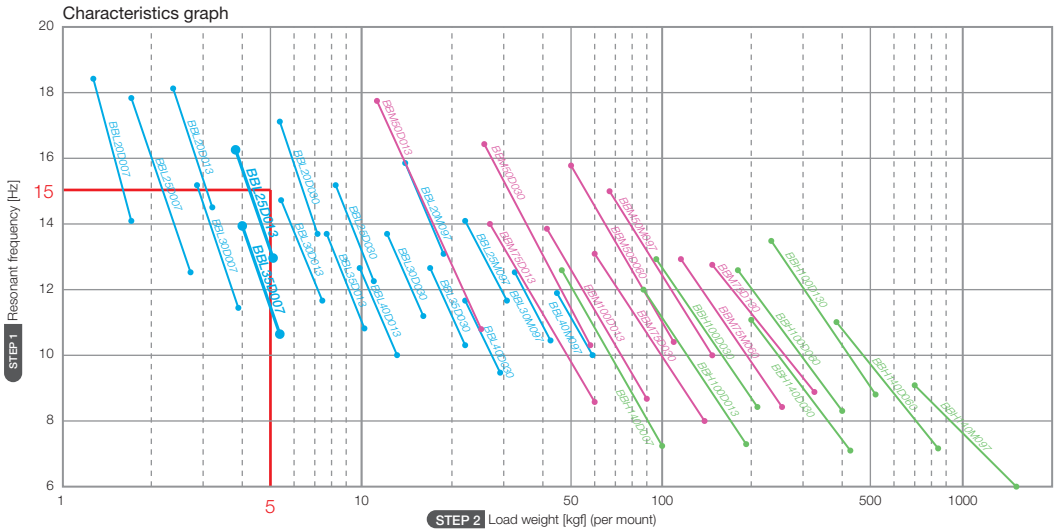

◎Warnings regarding selection

For devices that have a high center of gravity and devices which contain moving objects or vibration sources, large swaying may occur as a result of vibration isolation measures. Swaying of the device can be reduced by installing the vibration isolation products at a position near the center of gravity within the device.

◎Reading the vibration transmission characteristics graph

Vibration transmissibility is shown using a transmission characteristics graph like shown on the right. It is used as an indicator for representing the performance of vibration isolation products. The horizontal axis of the graph shows the frequency (Hz) and the vertical axis shows the vibration transmissibility (dB).

<Reading the graph>

If the vibrations to be eliminated or damped have a frequency of 40 Hz, then since the vibration transmissibility on the vertical axis is -10 dB, the vibrations will be attenuated to 1/3 (0.3) taking the magnitude of vibrations on the floor as 1. However, if the target vibrations have a frequency of 22 Hz, then since the vibration transmissibility is 10 dB, the vibrations will be amplified to 3. Care is required, because frequencies where the vibration transmissibility is greater than zero will be amplified. The frequency that is amplified the most is the resonant frequency of the vibration isolation product.

Vibration transmission characteristics graph

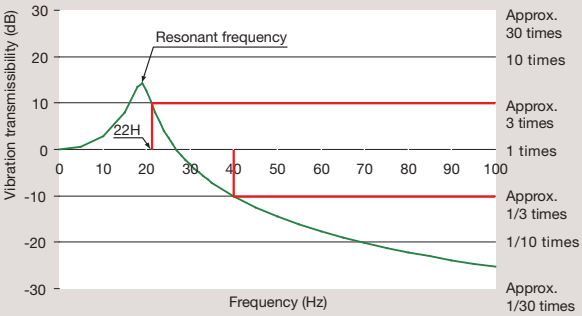

Base Elements
Clamp Units
Clamping Parts
Machine Vises
Drilling Vises
Vibration Isolation
Surface Plates and Measurement Instruments
Index

RoHS Compliant

NBK®

No.E-272

Low-Floor Type Vibration Isolation Plates

Material Insulated base mounts: ABS resin Insulated base: SPCC

Surface Treatment Insulated base: Black electrodeposited coating

- The height of the device installation surface is approximately 16 mm.
- Highly suitable for precision instruments that are averse to vibrations.
  Dampens vibrations transmitted from the floor or table, allowing you to get the most out of precision measurement instruments such as high magnification microscopes and surface roughness testers.
- Level adjustment is easy using the height adjustment knob.

⚠ Cautions

- The insulated base should be placed on a horizontal surface.
- Vibration isolation cannot be guaranteed when outside the maximum allowable load.
- The base should be installed such that the load is applied vertically on the top.
- The base should be installed such that the load is applied evenly across the insulated base mounts.
  Please consult us for details on support for off-center loads.

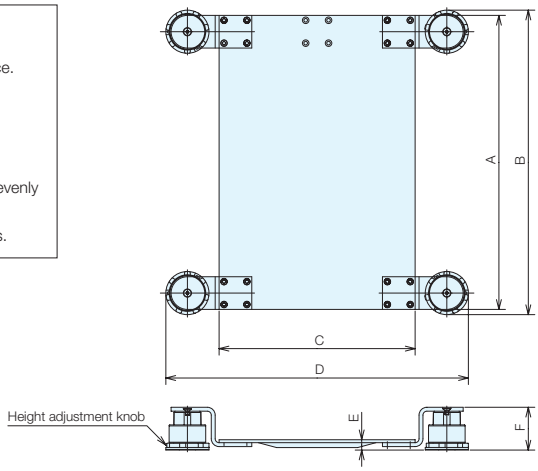

Mitsutoyo Compatible Model Chart

Low-Floor Type Vibration Isolated Plate No.	Compatible Models	Model
VLS3045-SJ401	Small surface roughness tester	SJ-401 SJ-402 * Simple stand for the SJ-400 series (178-039)
VLS3858-070L	Hardness tester	HM-100 HM-200
VLS4560-SH	Surface roughness tester	SV-2100M4, S4 SV-3100S4, H4/S8, H8 SV-C3100S4, H4/S8, H8 SV-C4100S4, H4/S8, H8 * Upright stand for the SJ500 (178-085)
	Contour measuring instrument	CV-2100M4, S4, H4 CV-3100S4, H4/S8,H8 CV-4100S4, H4/S8,H8 * Upright stand for the CV-1000 (218-024)

Base Elements
Clamp Units
Clamping Parts
Machine Vises
Drilling Vises
Vibration Isolation
Surface Plates and Measurement Instruments
Index

Specifications

Order No.	No.	A	B	C	D	E	F	Weight (kg)	Allowable Load (N)
98090	**VLS3045-010L**	450	466	300	463	16 - 26	66 - 76	8.6	49 - 117
98091	**VLS3045-020L**								98 - 245
98092	**VLS3045-030L**								216 - 470
98093	**VLS3045-070L**								460 - 931
98094	**VLS3045-100L**								686 - 1323
98095	**VLS3858-003L**	580	596	380	543			13.6	0 - 68
98096	**VLS3858-010L**								49 - 196
98097	**VLS3858-030L**								157 - 412
98098	**VLS3858-070L**								392 - 882
98099	**VLS3858-100L**								588 - 1274
105825	**VLS4560-030L**	600	616	450	613	17 - 27	66 - 76	17.5	108 - 372
105826	**VLS4560-070L**								363 - 872
105827	**VLS4560-100L**								539 - 1234

Mitsutoyo Specifications

Order No.	No.	A	B	C	D	E	F	Weight (kg)	Allowable Load (N)
100927	**VLS3045-SJ401**	450	466	300	458	25	75	6	258 - 590
102931	**VLS4560-SH**	600	616	450	613	17 - 27	66 - 76	18	863 - 1881

F: Usage height at lower limit of height adjustment. (Height adjustment range + 5mm)

Base Elements
Clamp Units
Clamping Parts
Machine Vises
Drilling Vises
Vibration Isolation
Surface Plates and Measurement Instruments
Index

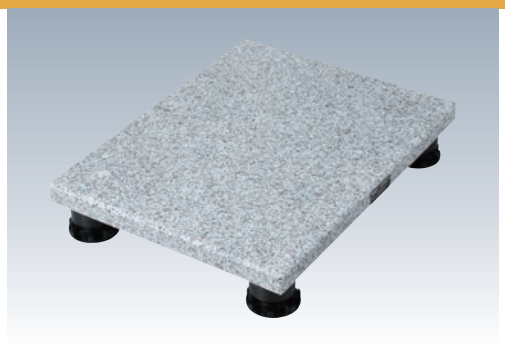

RoHS Compliant

NBK®

No.E-272

Vibration Isolation Bases

Material Insulated Base Mounts: ABS resin
Insulated Base: White granite

Surface Treatment Insulated Base: Polished finish

- Employs a low-profile design!
- Highly suitable for precision instruments that are averse to vibrations.
  Dampens vibrations transmitted from the floor or table, allowing you to get the most out of precision measurement instruments such as electronic balances, viscometers, and surface roughness testers.
- Level adjustment is easy using the height adjustment knob.

⚠ Cautions

- The insulated base should be placed on a horizontal surface.
- Vibration isolation cannot be guaranteed when outside the maximum allowable load.
- The base should be installed such that the load is applied vertically on the top.
- The base should be installed such that the load is applied evenly across the insulated base mounts.
  Please consult us for details on support for off-center loads.

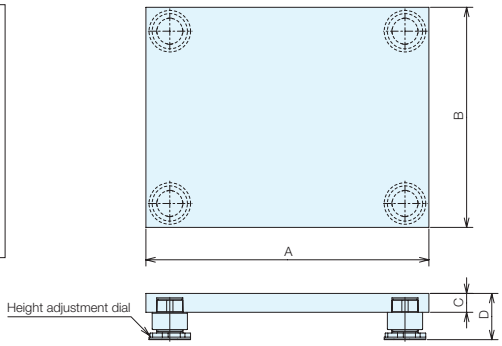

Specifications

Order No.	No.	A	B	C	D	Weight (kg)	Allowable Load (N)
98100	**VPG3545-003L**	450	350	30	69 - 79	13.6	0 - 68
98101	**VPG3545-010L**						49 - 196
98102	**VPG3545-030L**						157 - 412
98103	**VPG3545-070L**						392 - 882
98104	**VPG3545-100L**						588 - 1274
98105	**VPG4045-003L**		400			15.1	0 - 59
98106	**VPG4045-010L**						49 - 179
98107	**VPG4045-030L**						147 - 392
98108	**VPG4045-070L**						392 - 882
98109	**VPG4045-100L**						588 - 1225

D: Usage height at lower limit of height adjustment. (Height adjustment range + 5mm)

Usage Examples

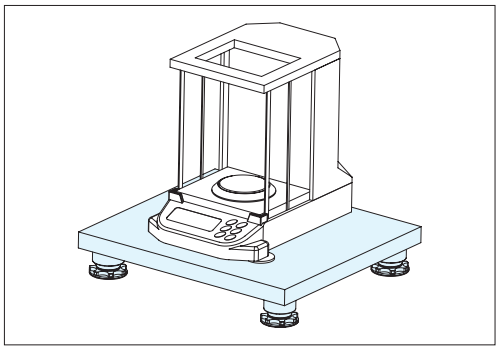

Base Elements
Clamp Units
Clamping Parts
Machine Vises
Drilling Vises
Vibration Isolation
Surface Plates and Measurement Instruments
Index

RoHS Compliant

NBK®

No.E-923

Vibration Isolation Mount

Material Case: Black ABS resin
Spring: Stainless steel Screws: Brass
Vibration isolation material: Viscoelastic material

- Does not need an air supply/Does not need maintenance.
- Suitable for light loads in the range of 26 to 352 N (per mount).
- Able to isolate and remove vibrations in the frequency range starting from 8 Hz horizontally and 9 Hz vertically.
- Equipped with an easy-to-use height adjustment knob (adjustment height 5 mm)
- Mount size remains the same regardless of the load.

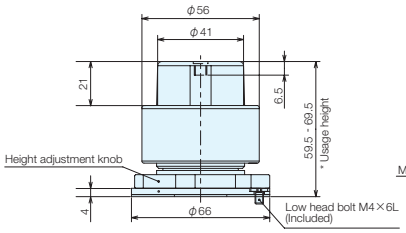

* When height adjustment knob at lower limit

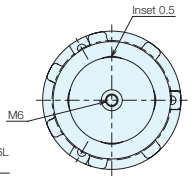

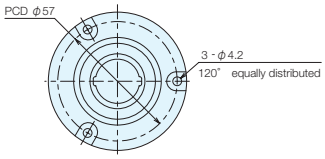

Specifications

Order No.	No.	Allowable Load (N)	
98085	BMM040-L	26 - 51 (N)	
98086	BMM060-L	42 - 82 (N)	
98087	BMM100-L	69 - 137 (N)	
98088	BMM200-L	132 - 262 (N)	
98089	BMM270-L	177 - 352 (N)	

Mount Selection

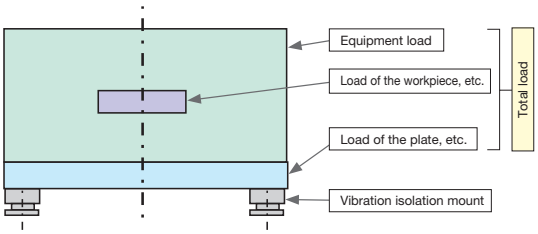

(1) Load for selecting vibration isolation mounts = Total load/4 mounts.
(2) Min load capacity ≤ Selected load ≤ Max load capacity.
Select the model of mount that satisfies this equation (2).
(3) Please consult us if the center of gravity of the load is off-center.

For reference: Load of Nabeya plate (reference value)

Low-Floor Type Vibration Isolation Plate		Vibration Isolation Base	
VLS3045	VLS3858	VPG3545	VPG4045
78 (N)	127 (N)	127 (N)	142 (N)

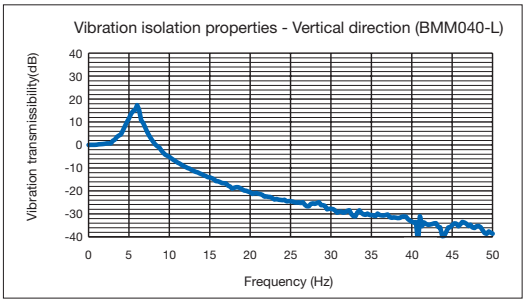

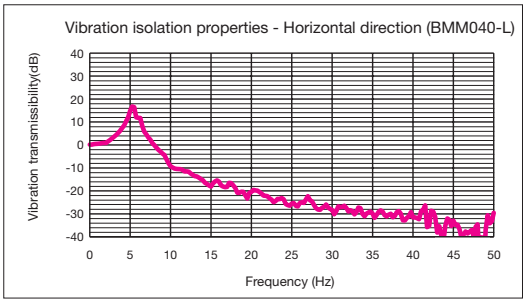

The above vibration isolation characteristics are the data for mount usage height of 64.5 mm.

Base Elements
Clamp Units
Clamping Parts
Machine Vises
Drilling Vises
Vibration Isolation
Surface Plates and Measurement Instruments
Index

Examples of Actual Improvement

The measured value of a roughness tester is not stable

Vibration source: Compressor

Photo of use

Before Test piece measurement data

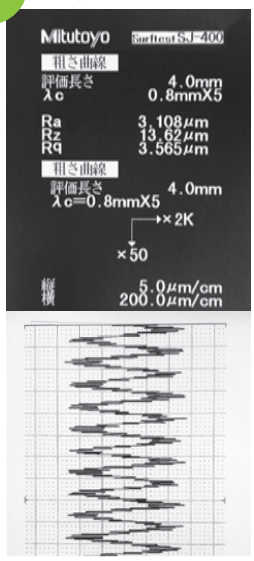

After Test piece measurement data

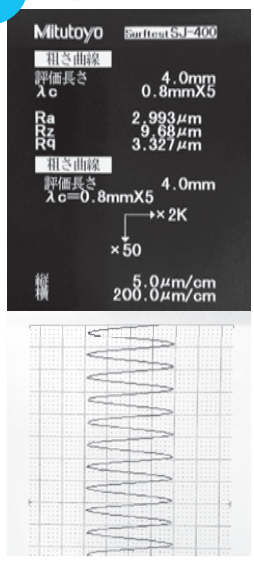

Test piece: Ra 2.94 μm

Before Vibration measurement data on stand where test piece mounted (time-series waveform)

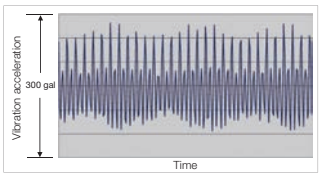

After Vibration measurement data on stand where test piece mounted (time-series waveform)

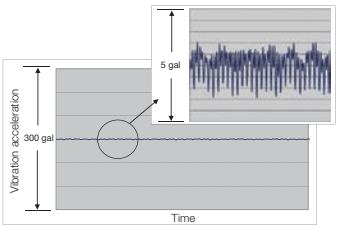

The image on a microscope monitor is blurry

Vibration source: Machine press

Photo of use

Before Monitor image

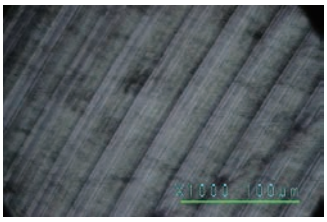

●Image not in focus due to vibrations

After Monitor image

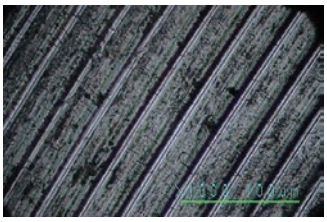

●Clear image free of vibrations

Base Elements
Clamp Units
Clamping Parts
Machine Vises
Drilling Vises
Vibration Isolation
Surface Plates and Measurement Instruments
Index

RoHS Compliant

NBK®

No.E-923

Vibration Isolation Mounts (Lightweight Type)

Material Upper and lower cases: ABS resin Spacer: ABS resin
Spring: SWP-A Screw part: Brass
Vibration isolation material: Viscoelastic material

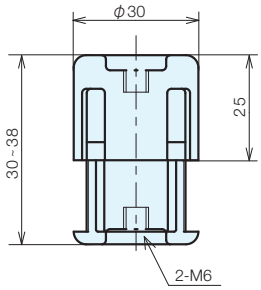

- Vibration isolation mount for lightweight loads. Can be used with lightweight loads starting from 300 g which could not be handled by conventional vibration isolation mounts.
- Provides vibration isolation from the low frequency range from 9 Hz horizontal/10 Hz vertical.
- Uses metal springs with a spring constant approximately 1/10th of rubber and gel-based vibration isolation material, to give a low resonant frequency.
- Surging, which can become a problem with metal springs, is suppressed using a viscoelastic material.
- Offers 3-axis vibration isolation.
  The vibrations produced by equipment such as motors are not limited to the vertical direction. The vibrations have horizontal and vertical components.
- Offers high vibration isolation performance in the horizontal direction, the same as the vertical direction.
- Has used load range indicators on the outer case, allowing you to check the suitability.
  Vibration isolation mounts provide a vibration isolation effect when used within the designated load range.
  You can check visually whether the load is sitting as designed.

Specifications

Order No.	No.	Main Body Color (Upper Case)	Allowable Load (N)	Spring Constant N/mm± 10%	Usable Frequencies Hz (Horizontal/ Vertical Directions)	Vibration Transmissibility (30 Hz or higher)	Recommended Usage Temperature (°C)	Weight (g)	
78840	BML-03	Gray	2.1 - 4.4	0.29	9.0 - 10.0 -	Tr=1/20	20 - 28	20	
78841	BML-05	Yellow	3.5 - 7.3	0.49					
78842	BML-10	Blue	6.9 - 14.0	0.98					
78843	BML-25	Red	15.0 - 30.0	20.6					
78844	BML-50	Green	31.0 - 64.0	4.31					

Vibration isolation characteristics depending on load: Vertical direction

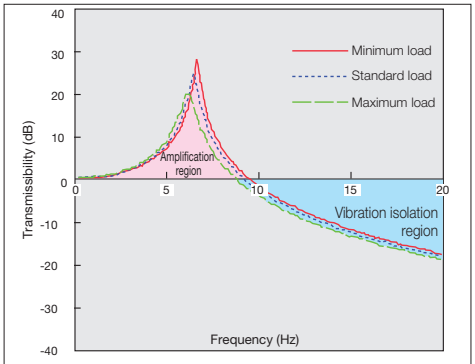

* The vibration isolation characteristics differ depending on the load on the vibration isolation mount.

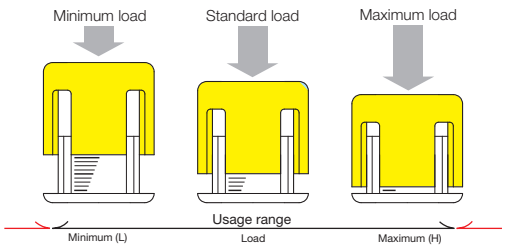

- If the load is less than the minimum load, the spring does not deflect and does not produce a vibration isolation effect.
- If the load is greater than the maximum load, the spring cannot deflect any further and does not produce a vibration isolation effect.

In cases like these, replace the vibration isolation mount with one that is suitable for the load.

Base Elements
Clamp Units
Clamping Parts
Machine Vises
Drilling Vises
Vibration Isolation
Surface Plates and Measurement Instruments
Index

RoHS Compliant

NBK®

No.E-942

Built-in Vibration Isolation Mounts (Lightweight Type)

Material Plate: SPHC Bolt: SUM23

Surface Treatment Trivalent chrome plating

This mount is for incorporation into other equipment and uses expanded polyurethane vibration isolation material which offers excellent vibration isolation.

Applications

Isolation of vibrations from external sources

- Isolates transmission of vibrations from external sources such as to precision measuring instruments, inspection equipment, and machining tools.

Suppression of vibrations transmitted to external devices

- Suppresses vibrations from vibrations sources such as pumps and generators from being transmitted to external devices.

Features

Isolates low-frequency vibrations

- Able to isolate low-frequency vibrations by using expanded polyurethane, which surpasses rubber-based vibration isolation materials.

Suitable for a wide range of loads

- Suitable for a wide range of loads from 11 N to 580 N.

Wide variety of vibration isolation materials

- 2 to 4 different types of vibration isolation materials are available for each size. This allows you to minimize differences in size even for different loads.

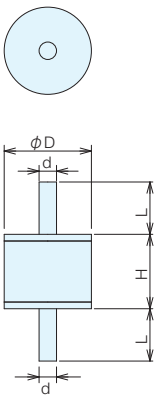

Characteristic Data

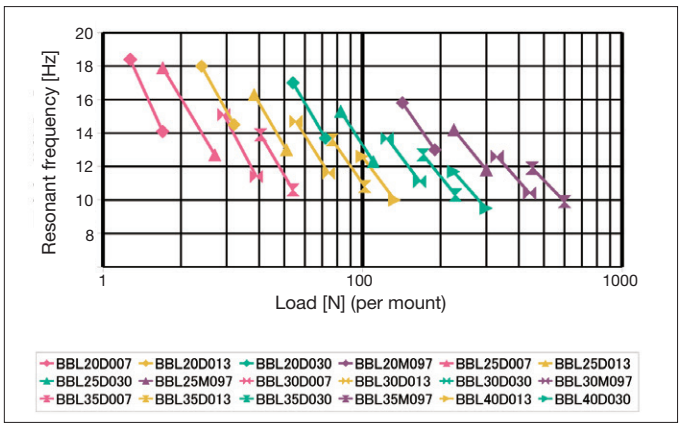

Selection Points

Read the resonant frequencies of the mounts depending on the load from the table on the left and select the mount where the resonant frequency is 1/2 (0.5 times) or less the frequency of the vibration you want to isolate.

Selection Examples	If you want to isolate the vibrations from a pump running at 1,800 rpm with a load of 50 N on each mount

- The vibration frequency generated by the pump is 1,800 rpm/60 seconds = 30 Hz. Therefore, select mounts that have a resonant frequency of 30 Hz/2 = 15 Hz or less.
- The BBL25D013 (resonant frequency of approx. 13 Hz with a 50 N load) or BBL35D007 (resonant frequency of approx. 11 Hz with a 50 N load) are suitable for this case.

Base Elements
Clamp Units
Clamping Parts
Machine Vises
Drilling Vises
Vibration Isolation
Surface Plates and Measurement Instruments
Index

Specifications

Order No.	No.	Vibration Isolation Material Color	Size [mm] D	d (Coarse Thread)	H	L	Allowable Load N	Resonant frequency [Hz]*1	Target Vibration Frequency [Hz]*2	Vibration Isolation Material Deformation [mm]*3	Weight (g)
109396	BBL20D007	Pink	20	M5 × 0.8	18.6	15.5	11 - 16	14	28 -	2	21
109397	BBL20D013	Dark yellow					23 - 31	15	29 -	2	21
109398	BBL20D030	Dark green					52 - 70	14	27 -	2	22
109399	BBL20M097	Dark magenta					130 - 180	13	26 -	2	22
109400	BBL25D007	Pink	25	M6 × 1.0	21.6	17.5	16 - 26	13	25 -	2	35
109401	BBL25D013	Dark yellow					37 - 50	13	26 -	2	35
109402	BBL25D030	Dark green					80 - 100	12	25 -	2	37
109403	BBL25M097	Dark magenta					210 - 290	12	24 -	3	38
109404	BBL30D007	Pink	30	M6 × 1.0	25.6	17.5	28 - 38	11	23 -	2	44
109405	BBL30D013	Dark yellow					53 - 72	12	23 -	3	46
109406	BBL30D030	Dark green					110 - 150	11	22 -	3	48
109407	BBL30M097	Dark magenta					320 - 430	10	21 -	3	51
109408	BBL35D007	Pink	35	M8 × 1.25	28.6	22.5	39 - 52	11	21 -	3	73
109409	BBL35D013	Dark yellow					73 - 98	11	22 -	3	75
109410	BBL35D030	Dark green					150 - 210	10	21 -	3	79
109411	BBL35M097	Dark magenta					440 - 580	10	20 -	4	83
109412	BBL40D013	Dark yellow	40	M8 × 1.25	32.6	22.5	95 - 120	10	20 -	3	91
109413	BBL40D030	Dark green					200 - 280	10	19 -	3	96

*1: The resonant frequency is the calculated value when the allowable load is applied.
*2: The target vibration frequency is the frequency that is subject to vibration isolation. This is based on the frequency where the vibrations when the allowable load is applied are attenuated to 1/2 to 1/3.
*3: The vibration isolation material deformation is the calculated value when the allowable load is applied.

⚠ Usage Warnings

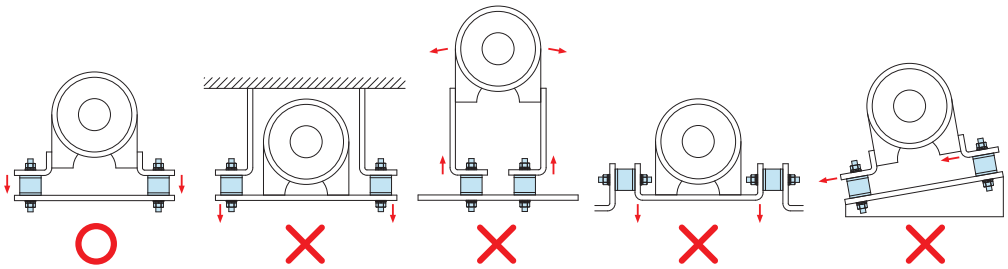

Correct usage (Compressive load) | Use suspended from the ceiling (Tensile load) | Use for objects with a high center of gravity (Tensile load) | Use in horizontal orientation (Shear load) | Use on slanted surface (one degree or more) (Shear load)

- If the resonant frequency of the mount is $1/\sqrt{2}$ (0.7) times or higher than the vibration frequency you want to eliminate, damping effect will not act and the vibrations will be amplified.
  The mount should be used loaded under compression.
- It cannot be used with a tensile or shear load. (Refer to the examples above)
  You should also ensure that the mounts are not loaded with tensile or shear loads during transport and storage. The mount may become damaged if subjected to tensile or shear loads.

Usage Examples

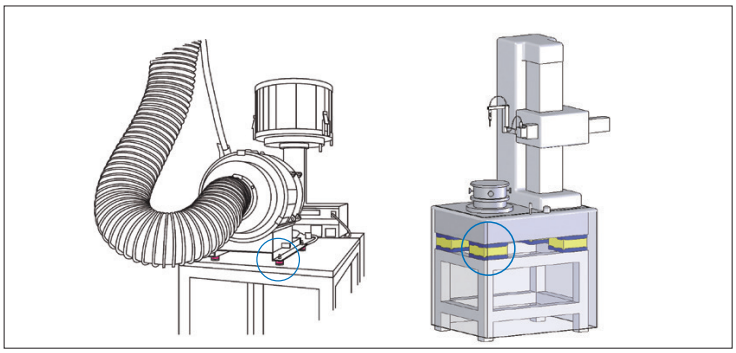

For devices with a high center of gravity, swaying of the device can be reduced by installing anti-vibration products at a position near the center of gravity inside the device.

Base Elements
Clamp Units
Clamping Parts
Machine Vises
Drilling Vises
Vibration Isolation
Surface Plates and Measurement Instruments
Index

RoHS Compliant

NBK®

No.E-942

Built-in Vibration Isolation Mounts (Midweight Type)

Material Plate: SPHC Bolt/nut: SWRCHIOR

Surface Treatment Trivalent chrome plating

This mount is for incorporation into other equipment and uses expanded polyurethane vibration isolation material which offers excellent vibration isolation.

Applications

Isolation of Vibrations From External Sources

- Isolates transmission of vibrations from external sources such as to precision measuring instruments, inspection equipment, and machining tools.

Suppression of Vibrations Transmitted to External Devices

- Suppresses vibrations from vibrations sources such as pumps and generators from being transmitted to external devices.

Features

This is able to isolate low-frequency vibrations

- Able to isolate low-frequency vibrations by using expanded polyurethane, which surpasses rubber-based vibration isolation materials.

Suitable for a Wide Range of Loads

- Suitable for a wide range of loads from 100 N to 3,100 N.

Wide Variety of Vibration Isolation Materials

- 2 to 4 different types of vibration isolation materials are available for each size. This allows you to minimize differences in size even for different loads.

Freely selectable combinations of connection methods

- For the midweight type, you can choose a combination of male and female screws.

Base Elements
Clamp Units
Clamping Parts
Machine Vises
Drilling Vises
Vibration Isolation
Surface Plates and Measurement Instruments
Index

(Bolt/nut)

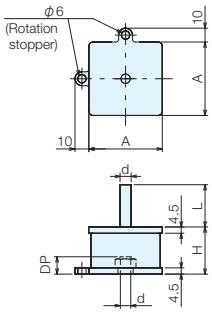

* The bolt for fixing the nut side should fit within the DP dimensions.

(Bolt/bolt)

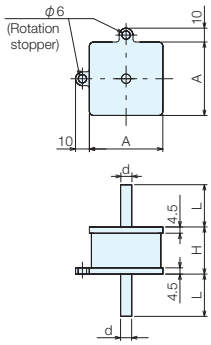

(Nut/nut)

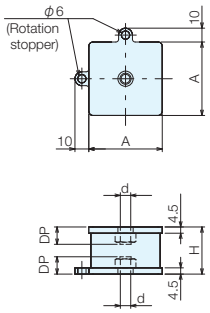

* The bolt for fixing should fit within the DP dimensions.

Characteristic Data

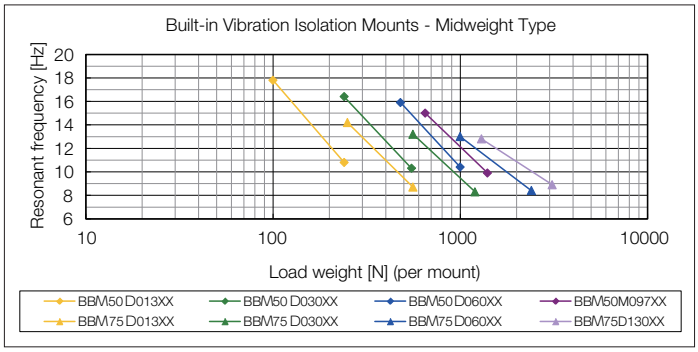

Selection Points

Read the resonant frequencies of the mounts depending on the load from the table on the left and select the mount where the resonant frequency is 1/2 (0.5 times) or less the frequency of the vibration you want to isolate.

Selection Examples	If you want to isolate the vibrations from a pump running at 1,800 rpm with a load of 300 N on each mount

- The vibration frequency generated by the pump is 1,800 rpm/60 seconds = 30 Hz. Therefore, select mounts that have a resonant frequency of 30 Hz/2 = 15 Hz or less.
- The BBM75D013 (resonant frequency of approx. 13 Hz with a 30 N load) or BBL50D030 (resonant frequency of approx. 15 Hz with a 300 N load) are suitable for this case.

Specifications

Order No.	No.	Vibration Isolation Material Color	Type	Size [mm] A	H	d (Coarse Thread)	L	DP	Maximum Allowable Load N	Resonant frequency [Hz]*1	Target Vibration Frequency [Hz]*2	Vibration Isolation Material Deformation [mm]*3	Weight (g)
109414	BBM50D013NB	Dark yellow	Bolt Nut	53	34.0	M8 × 1.25	30.5	8	100 - 240	11	22 -	2	250
109415	BBM50D030NB	Dark green							240 - 550	10	21 -	3	260
109416	BBM50D060NB	Dark blue							480 - 1000	10	21 -	3	270
109417	BBM50M097NB	Dark magenta							650 - 1400	10	20 -	4	270
109418	BBM75D013NB	Dark yellow		78	46.5	M12 × 1.75	50.5	12	250 - 560	9	17 -	4	590
109419	BBM75D030NB	Dark green							560 - 1200	8	17 -	4	620
109420	BBM75D060NB	Dark blue							1000 - 2400	8	17 -	4	650
109421	BBM75D130NB	Purple							1300 - 3100	9	18 -	4	670
109422	BBM50D013BB	Dark yellow	Bolt Bolt	53	34.0	M8 × 1.25	30.5	–	100 - 240	11	22 -	2	260
109423	BBM50D030BB	Dark green							240 - 550	10	21 -	3	270
109424	BBM50D060BB	Dark blue							480 - 1000	10	21 -	3	280
109425	BBM50M097BB	Dark magenta							880 - 1900	10	20 -	4	280
109426	BBM75D013BB	Dark yellow		78	46.5	M12 × 1.75	50.5	–	250 - 560	9	17 -	4	630
109427	BBM75D030BB	Dark green							560 - 1200	8	17 -	4	660
109428	BBM75D060BB	Dark blue							1000 - 2400	8	17 -	4	690
109429	BBM75D130BB	Purple							1300 - 3100	9	18 -	4	720
109430	BBM50D013NN	Dark yellow	Nut Nut	53	34.0	M8 × 1.25	–	8	100 - 240	11	22 -	2	240
109431	BBM50D030NN	Dark green							240 - 550	10	21 -	3	250
109432	BBM50D060NN	Dark blue							480 - 1000	10	21 -	3	260
109433	BBM50M097NN	Dark magenta							880 - 1900	10	20 -	4	260
109434	BBM75D013NN	Dark yellow		78	46.5	M12 × 1.75	–	12	250 - 560	9	17 -	4	540
109435	BBM75D030NN	Dark green							560 - 1200	8	17 -	4	580
109436	BBM75D060NN	Dark blue							1000 - 2400	8	17 -	4	610
109437	BBM75D130NN	Purple							1300 - 3100	9	18 -	4	630

⚠ Usage Warnings

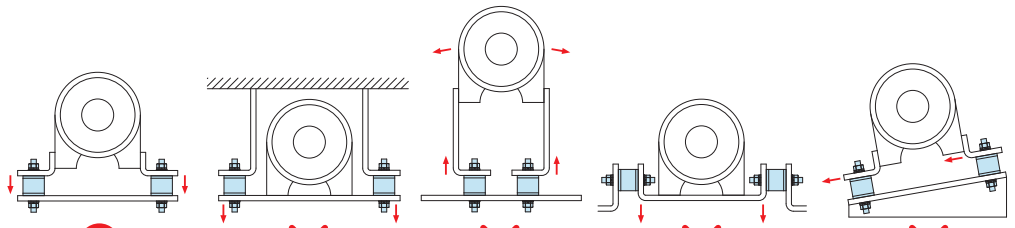

Correct usage (Compressive load) | Use suspended from the ceiling (Tensile load) | Use for objects with a high center of gravity (Tensile load) | Use in horizontal orientation (Shear load) | Use on slanted surface (one degree or more) (Shear load)

- If the resonant frequency of the mount is $1/\sqrt{2}$ (0.7) times or higher than the vibration frequency you want to eliminate, damping effect will not act and the vibrations will be amplified. The mount should be used loaded under compression.
- It cannot be used with a tensile or shear load. (Refer to the examples above)
  You should also ensure that the mounts are not loaded with tensile or shear loads during transport and storage. The mount may become damaged if subjected to tensile or shear loads.

Usage Examples

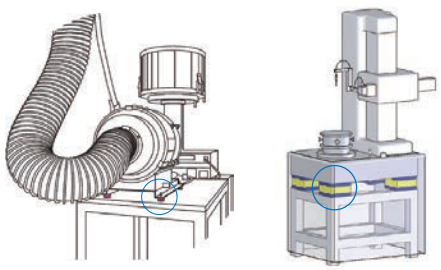

For devices with a high center of gravity, swaying of the device can be reduced by installing anti-vibration products at a position near the center of gravity inside the device.

Base Elements
Clamp Units
Clamping Parts
Machine Vises
Drilling Vises
Vibration Isolation
Surface Plates and Measurement Instruments
Index

RoHS Compliant

NBK®

No.E-942

Built-in Vibration Isolation Mounts (Heavyweight Type)

Material Plate: FC200 Surface Treatment Painting

This mount is for incorporation into other equipment and uses expanded polyurethane vibration isolation material which offers excellent vibration isolation.

Applications

Isolation of Vibrations From External Sources

- Isolates transmission of vibrations from external sources such as to precision measuring instruments, inspection equipment, and machining tools.

Suppression of Vibrations Transmitted to External Devices

- Suppresses vibrations from vibrations sources such as pumps and generators from being transmitted to external devices.

Features

This is able to isolate low-frequency vibrations

- Able to isolate low-frequency vibrations by using expanded polyurethane, which surpasses rubber-based vibration isolation materials.

Suitable for a Wide Range of Loads

- Suitable for a wide range of loads from 400 N to 14700 N.

Wide Variety of Vibration Isolation Materials

- 2 to 5 different types of vibration isolation materials are available for each size. This allows you to minimize differences in size even for different loads.

Built-in stopper mechanism

- Has a built-in stopper mechanism for handling large vibrations such as earthquakes.

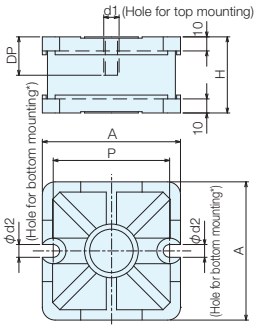

* For hex socket cap bolt

Base Elements
Clamp Units
Clamping Parts
Machine Vises
Drilling Vises
Vibration Isolation
Surface Plates and Measurement Instruments
Index

Characteristic Data

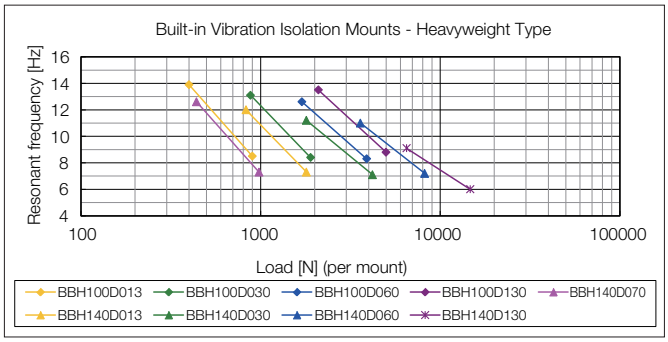

Selection Points

Read the resonant frequencies of the mounts depending on the load from the table on the left and select the mount where the resonant frequency is 1/2 (0.5 times) or less the frequency of the vibration you want to isolate.

Selection Examples	If you want to isolate the vibrations from a motor running at 2,400 rpm with a load of 500 N on each mount

- The vibration frequency generated by the motor is 2,400 rpm/60 seconds = 40Hz.
  Therefore, select mounts that have a resonant frequency of 40 Hz/2 = 20 Hz or less.
- The BBH140D070 (resonant frequency of approx. 12 Hz with a 500 N load) or BBH100D013 (resonant frequency of approx. 13 Hz with a 500 N load) are suitable for this case.

Specifications

Order No.	No.	Vibration Isolation Material Color	Size [mm] A	P	d1 (Course Thread)	d2	H	DP	Maximum Allowable Load N	Resonant frequency [Hz]*1	Target Vibration Frequency [Hz]*2	Vibration Isolation Material Deformation [mm]*3	Mass (kg)
109438	BBH100D013	Dark yellow	108	91	M12 × 1.75	10	59.5	15	400 - 900	9	17 -	4	1.6
109439	BBH100D030	Dark green							880 - 1900	8	17 -	4	1.7
109440	BBH100D060	Dark blue							1700 - 3900	8	17 -	5	1.7
109441	BBH100D130	Purple							2100 - 5000	9	18 -	4	1.7
109442	BBH140D007	Pink	148	126	M16 × 2.0	12	72.0	20	440 - 980	7	15 -	5	3.5
109443	BBH140D013	Dark yellow							830 - 1800	7	15 -	5	3.5
109444	BBH140D030	Dark green							1800 - 4200	7	14 -	6	3.7
109445	BBH140D060	Dark blue							3600 - 8200	7	14 -	6	3.8
109446	BBH140M097	Dark magenta							6500 - 14700	6	12 -	9	3.9

*1: The resonant frequency is the calculated value when the maximum allowable load is applied.
*2: The target vibration frequency is the frequency that is subject to vibration isolation. This is based on the frequency where the vibrations when the maximum allowable load is applied are attenuated to 1/2 to 1/3.
*3: The vibration isolation material deformation is the calculated value when the maximum allowable load is applied.

⚠ Usage Warnings

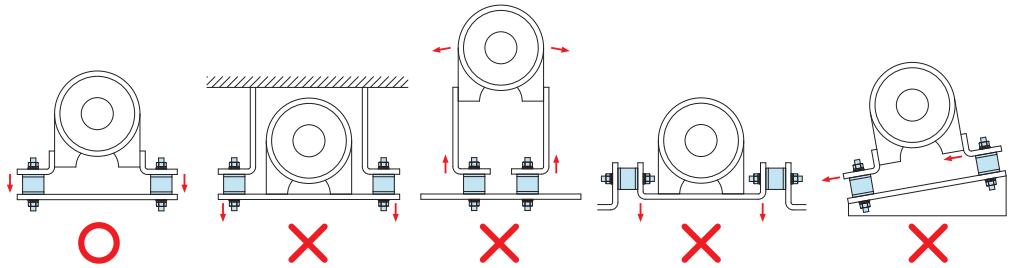

Correct usage (Compressive load) | Use suspended from the ceiling (Tensile load) | Use for objects with a high center of gravity (Tensile load) | Use in horizontal orientation (Shear load) | Use on slanted surface (one degree or more) (Shear load)

- If the resonant frequency of the mount is $1/\sqrt{2}$ (0.7) times or higher than the vibration frequency you want to eliminate, damping effect will not act and the vibrations will be amplified.
  The mount should be used loaded under compression.
- It cannot be used with a tensile or shear load. (Refer to the examples above)
  You should also ensure that the mounts are not loaded with tensile or shear loads during transport and storage. The mount may become damaged if subjected to tensile or shear loads.

Usage Examples

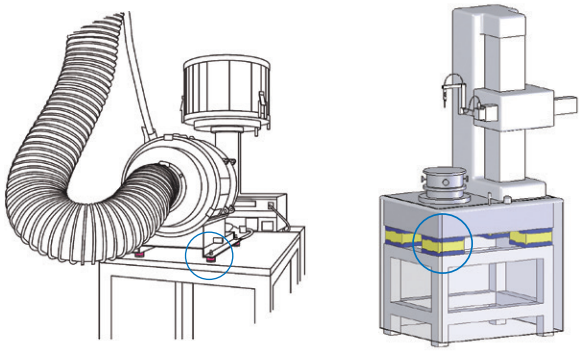

For devices with a high center of gravity, swaying of the device can be reduced by installing anti-vibration products at a position near the center of gravity inside the device.

Base Elements
Clamp Units
Clamping Parts
Machine Vises
Drilling Vises
Vibration Isolation
Surface Plates and Measurement Instruments
Index

MEMO

Base Elements
Clamp Units
Clamping Parts
Machine Vises
Drilling Vises
Vibration Isolation
Surface Plates and Measurement Instruments
Index

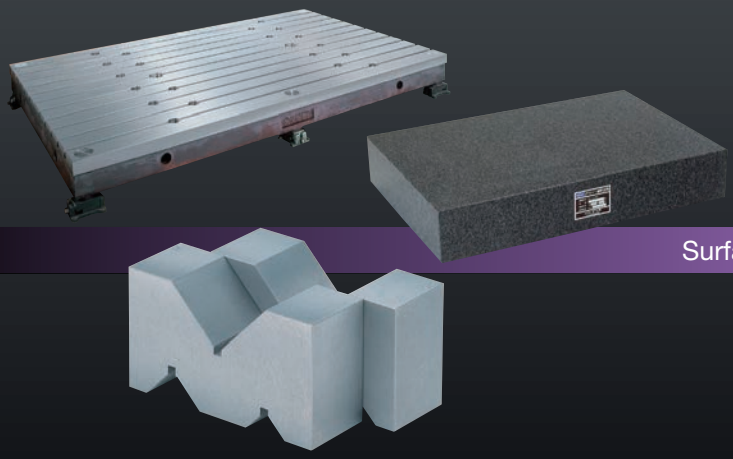

Surface Plates / Inspection Facilities

Surface Plate Lineup

Lineup of surface plates for a wide variety of applications based on thorough quality control

For tests

Mounting and leveling adjustment methods
* Refer to the descriptions of the icons for details.

Vibration Isolation Surface Plates

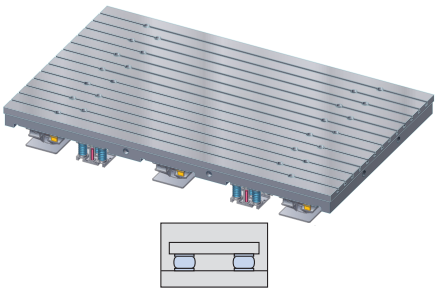

For inspection and measuring

Mounting and leveling adjustment methods
* Refer to the descriptions of the icons for details.

JIS Type Cast Iron Surface Plates

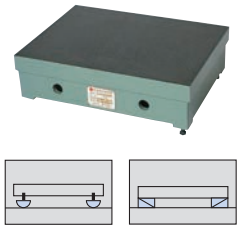

P.168

Stands for JIS Type Cast Iron Surface Plates

P.172

JIS Type Cast Iron Surface Plates With Movable Stand

For manufacturing and assembly

Mounting and leveling adjustment methods
* Refer to the descriptions of the icons for details.

Cast Iron Surface Plates

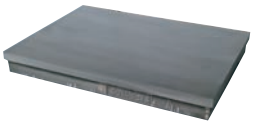

P.174

Stands for Cast Iron Surface Plates

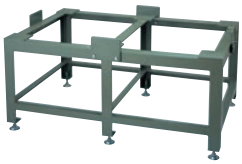

P.176

Stands for Cast Iron Surface Plates

(With drawers and shelves)

Measurement Instruments

Test Workpiece Mounting Blocks

For tests | For manufacturing and assembly

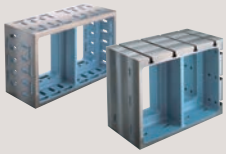

Angle Surface Plates

For tests | For manufacturing and assembly

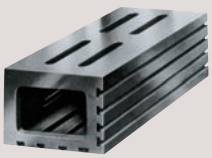

Long Surface Plates

For inspection and measuring | For manufacturing and assembly

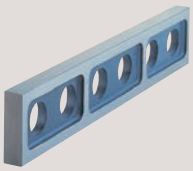

Mounting and Leveling Adjustment Methods with Icons

Vibration isolation mount | Adjustment bolt/pedestal/anchor | Adjustment bolt/anchor | Adjustment screw | Stand with leveling jack | Direct placement | Leveling block

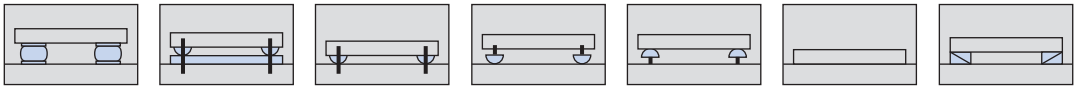

Vibration Test Surface Plates

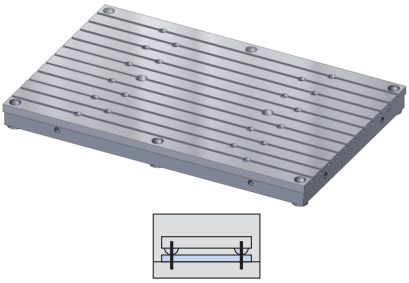

Rail Type Surface Plates

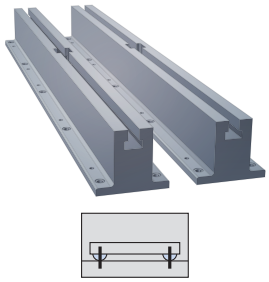

Granite Surface Plates

P.170

Stands for Granite Surface Plates

P.173

Stand Sets

Stands for Granite Surface Plates (With Casters)

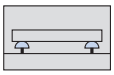

BS (Brown & Sharpe) Type Surface Plates

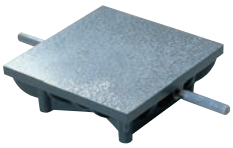

Surface Plates for Manufacturing

Hammer Surface Plates for Sheet Metal

Honeycomb Surface Plates for Plate Work

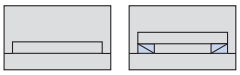

Master Squares

For inspection and measuring | For manufacturing and assembly

Angle Masters

For inspection and measuring | For manufacturing and assembly

Vee Blocks Type A

For inspection and measuring

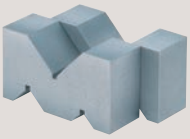

Vee Blocks Type B

For inspection and measuring

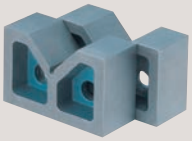

P.179

Box Vee Blocks

For inspection and measuring

P.178

Base Elements
Clamp Units
Clamping Parts
Machine Vises
Drilling Vises
Vibration Isolation
Surface Plates and Measurement Instruments
Index

No.E-130

JIS Type Cast Iron Surface Plates

Material FC250 Structure Rib structure
Heat Treatment Annealing Used Surface Hand scraped finish
Painting Position Side face
Accessories Adjustment screws (except large surface plates)

- Precision and rigidity conform to JIS standards (JIS B7513).
- The used surface has low linking (adsorption), offering smooth handling of precision instruments.
- Offers excellent additional machinability, making it easy to repair scratches, etc.
- The level of the surface plate can be adjusted using the included adjustment screws.
- The level of large surface plates can be adjusted using leveling blocks.

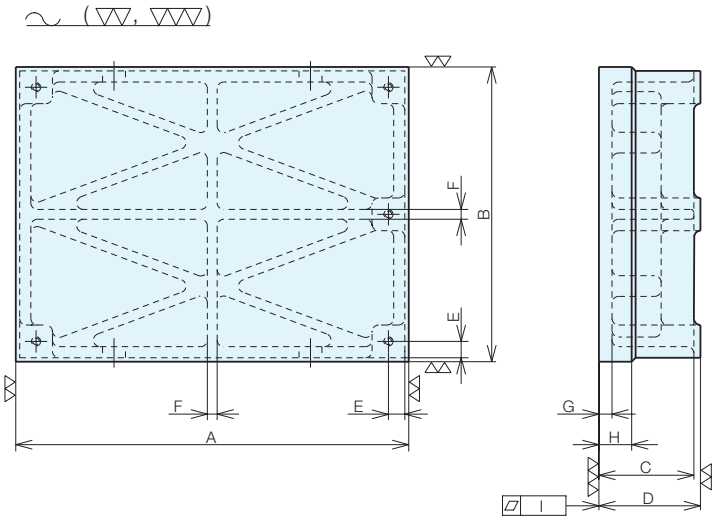

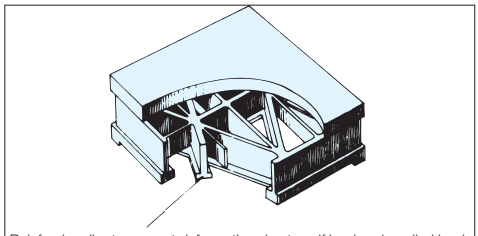
Reinforcing ribs to prevent deformation due to self load and applied load

Base Elements
Clamp Units
Clamping Parts
Machine Vises
Drilling Vises
Vibration Isolation
Surface Plates and Measurement Instruments
Index

Specifications

No.	A × B × C	D	E	F	G	H	Maximum Allowable Load (kN)	Weight (kg)	Adjustment Screw No.	Quantity
JP03030	300 × 300 × 95	101	14	-	15	34	1.6	28	SSB-M10 × 30B	3
JP03040	400 × 300 × 95	101	14	-	15	34	2.5	35	SSB-M10 × 30B	3
JP04040	400 × 400 × 110	116	14	10	15	40	2.5	54	SSB-M10 × 30B	3
JP04063	630 × 400 × 150	160	17	17	20	50	3.15	115	SSB-M12 × 50B	5
JP04560	600 × 450 × 145	155	15	15	18	50	3.15	115	SSB-M12 × 50B	5
JP05050	500 × 500 × 135	141	16	15	19	40	3.15	92	SSB-M10 × 50B	3
JP05075	750 × 500 × 165	175	18	16	19	50	5	125	SSB-M16 × 50B	3
JP06060	600 × 600 × 140	165	16	16	18	50	5	155	SSB-M16 × 50B	3
JP06363	630 × 630 × 160	170	20	20	25	50	5	180	SSB-M16 × 50B	5
JP06310	1000 × 630 × 220	235	25	20	30	75	8	480	SSB-M16 × 50B	5
JP07510	1000 × 750 × 225	240	17	17	22	75	8	395	SSB-M16 × 50B	5
JP09012	1200 × 900 × 225	250	20	18	25	75	8	710	SSB-M16 × 50B	5
JP10010	1000 × 1000 × 245	270	32	28	40	75	8	830	SSB-M16 × 50B	5
JP10015	1500 × 1000 × 270	295	28	25	30	75	16	1180	SSB-M20 × 50B	5
JP10016	1600 × 1000 × 270	290	30	25	35	75	20	1350	SSB-M20 × 50B	5
JP10020	2000 × 1000 × 300	330	30	25	45	80	25	1690	-	-
JP12024	2400 × 1200 × 350	370	35	22	42	80	31.5	2270	-	-
JP16025	2500 × 1600 × 350	370	30	30	40	80	31.5	2850	-	-

JIS 0 Grade				JIS 1 Grade				JIS 2 Grade			
Order No.	No.	Flatness: I μm		Order No.	No.	Flatness: I μm		Order No.	No.	Flatness: I μm	
40655	**JP03030-0**	4		**40635**	**JP03030-1**	8		**40615**	**JP03030-2**	16	
40656	**JP03040-0**	4		**40636**	**JP03040-1**	8		**40616**	**JP03040-2**	16	
40657	**JP04040-0**	4.5		**40637**	**JP04040-1**	9		**40617**	**JP04040-2**	17	
40658	**JP04063-0**	5		**40638**	**JP04063-1**	10		**40618**	**JP04063-2**	20	
40659	**JP04560-0**	5		**40639**	**JP04560-1**	10		**40619**	**JP04560-2**	20	
40660	**JP05050-0**	5		**40640**	**JP05050-1**	10		**40620**	**JP05050-2**	20	
40661	**JP05075-0**	5.5		**40641**	**JP05075-1**	11		**40621**	**JP05075-2**	22	
40662	**JP06060-0**	5		**40642**	**JP06060-1**	10		**40622**	**JP06060-2**	21	
40663	**JP06363-0**	4.5		**40643**	**JP06363-1**	9		**40623**	**JP06363-2**	17	
40664	**JP06310-0**	6		**40644**	**JP06310-1**	12		**40624**	**JP06310-2**	24	
40665	**JP07510-0**	6.5		**40645**	**JP07510-1**	13		**40625**	**JP07510-2**	26	
40666	**JP09012-0**	7		**40646**	**JP09012-1**	14		**40626**	**JP09012-2**	28	
40667	**JP10010-0**	7		**40647**	**JP10010-1**	14		**40627**	**JP10010-2**	28	
40668	**JP10015-0**	8		**40648**	**JP10015-1**	16		**40628**	**JP10015-2**	33	
40669	**JP10016-0**	8		**40649**	**JP10016-1**	16		**40629**	**JP10016-2**	33	
40670	**JP10020-0**	9.5		**40650**	**JP10020-1**	19		**40630**	**JP10020-2**	38	
40671	**JP12024-0**	10.5		**40651**	**JP12024-1**	21		**40631**	**JP12024-2**	42	
40673	**JP16025-0**	11.5		**40653**	**JP16025-1**	23		**40633**	**JP16025-2**	46	

About the Maximum Allowable Load

The maximum allowable load is the value calculated and set based on a "loading calculation" under the following conditions. This should be used as a rough guide when selecting the surface plate.

- Load conditions: Load concentrated in the center
- Support conditions: Freely supported at both ends

Base Elements
Clamp Units
Clamping Parts
Machine Vises
Drilling Vises
Vibration Isolation
Surface Plates and Measurement Instruments
Index

ERON®

No.E-230

Granite Surface Plates

Material Granite stone Structure Cut from virgin material
Used Surface Lapped finish

- Precision and rigidity conform to JIS standards (JIS B7513).
- Offers excellent wear resistance making it hard to scratch.
- Offers excellent corrosion resistance, and does not corrode readily.
- The bottom surface of the surface plate is fitted with a seat for a leveling jack.

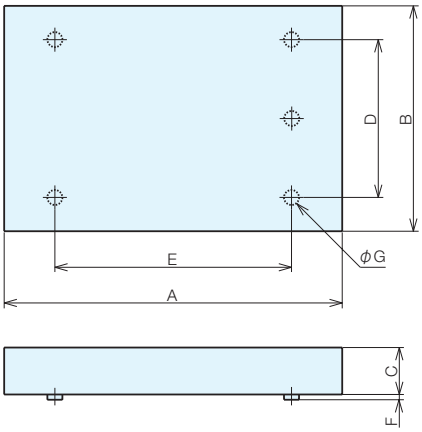

■Special machining is also available. Please consult us for details.

Machining examples: Tapped holes, steps, etc.

Applications: Base for liquid crystal and semiconductor-related fabrication units, base for high accuracy measuring units, base for high accuracy machining equipment, etc.

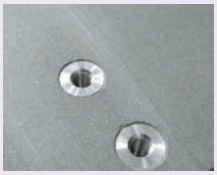

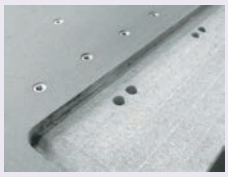

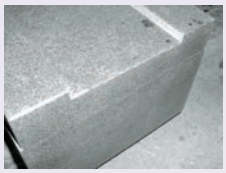

Base Elements
Clamp Units
Clamping Parts
Machine Vises
Drilling Vises
Vibration Isolation
Surface Plates and Measurement Instruments
Index

Size Chart

No.	A × B × C	D	E	F	G	Weight (kg)	Maximum Allowable Load (kN)
GP02020	200 × 200 × 75	-	-	-	-	9.0	0.8
GP02525	250 × 250 × 75	-	-	-	-	14.0	0.8
GP03030	300 × 300 × 75	-	-	-	-	18.2	0.8
GP03045	450 × 300 × 75	-	-	-	-	27.3	0.8
GP04560	600 × 450 × 100	315	420	10	30	73.0	2
GP05050	500 × 500 × 100	-	-	-	-	68.0	2
GP05075	750 × 500 × 125	350	525	10	30	126.0	2.5
GP06060	600 × 600 × 125	420	420	10	30	122.0	2.5
GP06090	900 × 600 × 125	420	630	10	30	182.0	2.5
GP07510	1000 × 750 × 150	525	700	10	30	304.0	4.5
GP09018	1800 × 900 × 200	630	1260	10	50	875.0	5.6
GP10010	1000 × 1000 × 150	700	700	10	30	405.0	6.3
GP10015	1500 × 1000 × 200	700	1050	10	50	810.0	8
GP10020	2000 × 1000 × 250	700	1400	10	50	1350.0	9
GP15030	3000 × 1500 × 400*	1050	2100	10	110	4860.0	20
GP20030	3000 × 2000 × 500	1400	2100	10	110	8090.0	50

* The C dimension of the GP15030 is 500 for the JIS grade 00 only (weight: 6,070 kg).

Granite surface plate (single piece)

JIS 1 Grade				JIS 0 Grade				JIS 00 Grade			
Order No.	No.	Flatness μm		Order No.	No.	Flatness μm		Order No.	No.	Flatness μm	
69398	**GP02020-1**	7		**69400**	**GP02020-0**	3.5		**69402**	**GP02020-00**	μ m	
69399	**GP02525-1**	7		**69401**	**GP02525-0**	3.5		**69403**	**GP02525-00**	2	
40573	**GP03030-1**	8		**40587**	**GP03030-0**	4		**40601**	**GP03030-00**	2	
40574	**GP03045-1**	9		**40588**	**GP03045-0**	4.5		**40602**	**GP03045-00**	2	
40575	**GP04560-1**	10		**40589**	**GP04560-0**	5		**40603**	**GP04560-00**	2.5	
40576	**GP05050-1**	10		**40590**	**GP05050-0**	5		**40604**	**GP05050-00**	2.5	
40577	**GP05075-1**	11		**40591**	**GP05075-0**	5.5		**40605**	**GP05075-00**	3	
40578	**GP06060-1**	10		**40592**	**GP06060-0**	5		**40606**	**GP06060-00**	2.5	
40579	**GP06090-1**	12		**40593**	**GP06090-0**	6		**40607**	**GP06090-00**	3	
40580	**GP07510-1**	13		**40594**	**GP07510-0**	6.5		**40608**	**GP07510-00**	3	
40581	**GP09018-1**	18		**40595**	**GP09018-0**	9		**40609**	**GP09018-00**	4.5	
40582	**GP10010-1**	14		**40596**	**GP10010-0**	7		**40610**	**GP10010-00**	3.5	
40583	**GP10015-1**	16		**40597**	**GP10015-0**	8		**40611**	**GP10015-00**	4	
40584	**GP10020-1**	19		**40598**	**GP10020-0**	9.5		**40612**	**GP10020-00**	4.5	
40585	**GP15030-1**	25		**40599**	**GP15030-0**	13		**40613**	**GP15030-00**	6.5	
40586	**GP20030-1**	27		**40600**	**GP20030-0**	13.5		**40614**	**GP20030-00**	7	

About the Maximum Allowable Load

The maximum allowable load is the value calculated and set based on a "loading calculation" under the following conditions.

This should be used as a rough guide when selecting the surface plate.

- Load conditions: Load concentrated in the center
- Support conditions: Freely supported at both ends

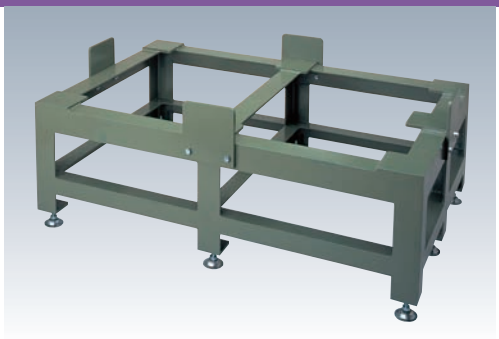

No.E-130S

Stands for JIS Type Cast Iron Surface Plates

Material Rolled steel Structure Welded construction
Painting Position Steel on all faces

- Stand exclusively for JIS type surface plates.
- Stoppers prevent the surface plate from shifting or falling.
- Surface plate height (C dimension) adjustment is possible by level adjustment using a foot jack.
- Stands for large surface plates are custom made. (Large surface plates: JP10020, JP12024, JP16025)

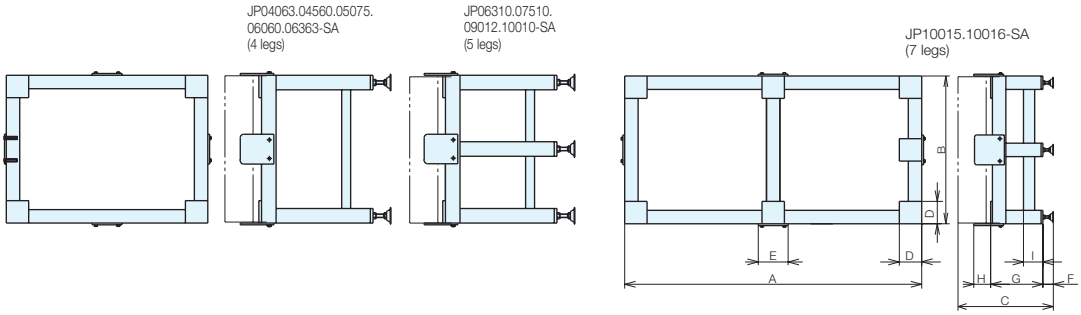

Base Elements
Clamp Units
Clamping Parts
Machine Vises
Drilling Vises
Vibration Isolation
Surface Plates and Measurement Instruments
Index

Specifications

Order No.	No.	Compatible Surface Plates	Surface Plate Size	A	B	C
40795	**JP04063-SA**	JP04063	400 × 630	630	400	800
40796	**JP04560-SA**	JP04560	450 × 600	600	450	800
40797	**JP05075-SA**	JP05075	500 × 750	750	500	800
40798	**JP06060-SA**	JP06060	600 × 600	600	600	800
40799	**JP06363-SA**	JP06363	630 × 630	630	630	800
40800	**JP06310-SA**	JP06310	630 × 1000	1000	630	800
40801	**JP07510-SA**	JP07510	750 × 1000	1000	750	800
40802	**JP09012-SA**	JP09012	900 × 1200	1200	900	800
40803	**JP10010-SA**	JP10010	1000 × 1000	1000	1000	800
40804	**JP10015-SA**	JP10015	1000 × 1500	1500	1000	800
40805	**JP10016-SA**	JP10016	1000 × 1600	1600	1000	800

No.	D	E	F	G	H	I	Foot Jack No.	Foot Jack Quantity	Weight (kg)	
JP04063-SA	125	150	45 - 120	530	83	140	FJ16100	4	50	
JP04560-SA	125	150	45 - 120	530	83	140	FJ16100	4	49	
JP05075-SA	125	150	45 - 120	510	83	140	FJ16100	4	57	
JP06060-SA	150	150	45 - 120	520	83	140	FJ16100	4	56	
JP06363-SA	150	150	45 - 120	500	83	140	FJ16100	4	65	
JP06310-SA	150	150	45 - 120	440	108	150	FJ16100	5	76	
JP07510-SA	150	150	45 - 120	430	108	150	FJ16100	5	78	
JP09012-SA	150	150	45 - 120	430	108	150	FJ16100	5	84	
JP10010-SA	150	150	45 - 120	410	108	150	FJ16100	5	82	
JP10015-SA	150	200	45 - 120	380	108	140	FJC16100	7	158	
JP10016-SA	150	200	45 - 120	380	108	140	FJC16100	7	160	

* Foot jack endurance load (FJ16100: 6 kN/unit, FJC16100: 17 kN/unit)

No.E-230S

Stands for Granite Surface Plates

Material Rolled steel Structure Welded construction
Painting Position Steel on all faces

- Stand exclusively for granite surface plates.
- Shifting and dropping of the surface plate is kept to a minimum by the built-in leveling jack.
- Surface plate height (C dimension adjustment) is possible by level adjustment using a foot jack.
- The surface plate level can be fine-tuned using the built-in leveling jack.

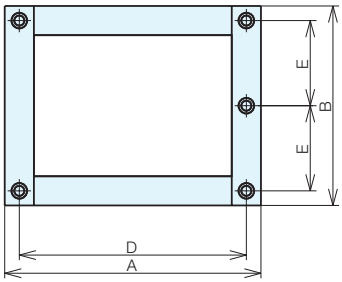

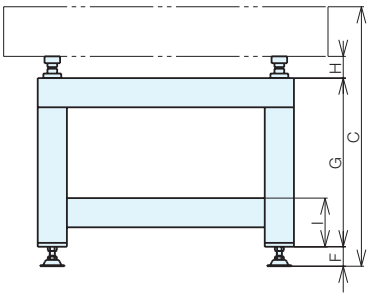

Specifications

Order No.	No.	Compatible Surface Plates	Surface Plate Size	A	B	C
40809	**GP04560-SA**	GP04560	600 × 450	495	390	800
40810	**GP05075-SA**	GP05075	750 × 500	600	425	800
40811	**GP06060-SA**	GP06060	600 × 600	495	495	800
40812	**GP06090-SA**	GP06090	900 × 600	705	495	800
40813	**GP07510-SA**	GP07510	1000 × 750	790	615	800
40814	**GP09018-SA**	GP09018	1800 × 900	1360	730	800
40815	**GP10010-SA**	GP10010	1000 × 1000	790	790	800
40816	**GP10015-SA**	GP10015	1500 × 1000	1150	800	800
40817	**GP10020-SA**	GP10020	2000 × 1000	1500	800	800

No.	D	E	F	G	H	I	Foot Jack No.	Quantity	Weight (kg)
GP04560-SA	420	157.5	50 - 100	570	67 - 97	150	FJ16100	4	42
GP05075-SA	525	175	50 - 100	545	67 - 97	150	FJ16100	4	44
GP06060-SA	420	210	50 - 100	545	67 - 97	150	FJ16100	4	44
GP06090-SA	630	210	50 - 100	545	67 - 97	150	FJ16100	4	48
GP07510-SA	700	262.5	50 - 100	520	67 - 97	150	FJ16100	4	73
GP09018-SA	1260	315	50 - 100	450	78 - 108	160	FJ20100	4	108
GP10010-SA	700	350	50 - 100	520	67 - 97	180	FJ16100	4	80
GP10015-SA	1050	350	50 - 100	450	78 - 108	160	FJ20100	4	103
GP10020-SA	1400	350	50 - 100	400	78 - 108	160	FJC20100	4	156

* Foot jack endurance load (FJ16100: 6 kN/unit, FJ20100: 6.5 kN/unit, FJC20100: 40 kN/unit)

Base Elements
Clamp Units
Clamping Parts
Machine Vises
Drilling Vises
Vibration Isolation
Surface Plates and Measurement Instruments
Index

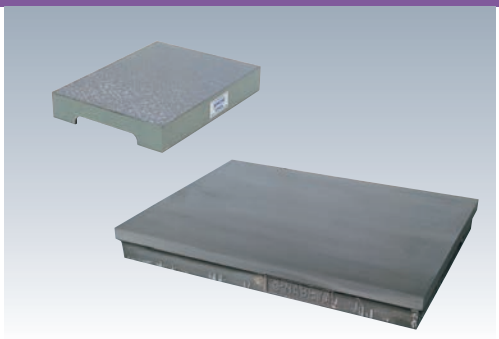

No.E-127

Cast Iron Surface Plates

Material FC250 **Structure** Rib structure
Heat Treatment Annealing
Used Surface Machined finish, hand scraped finish (grade A scraping, grade B scraping)
Painting Position Side face of scraped items

- Six face machining.
- Can be used for a wide range of applications from inspection and measurement to fabrication and assembly.

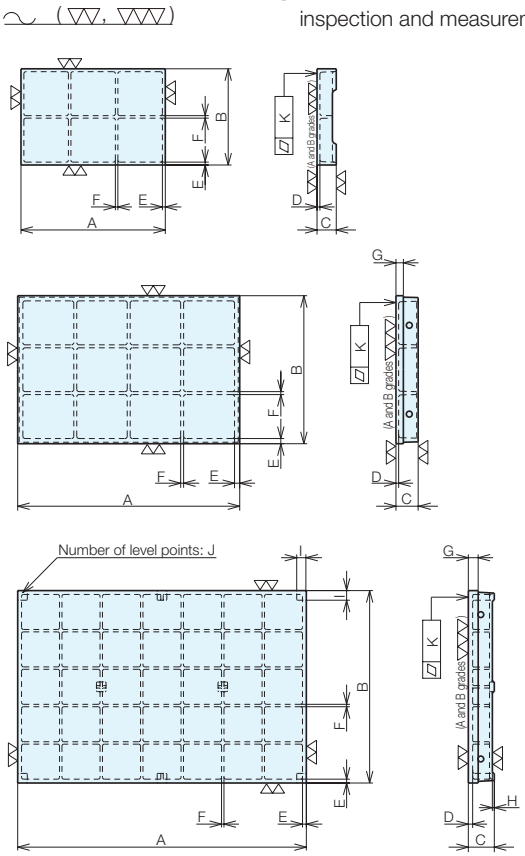

* The level point and rib positions vary depending on the size.

Size Chart

No.	A×B×C	D	E	F	G	H	I	J	Number of Ribs	Maximum Allowable Load (kN)	Weight (kg)
CP02020	200×200×50	9	8	7	-	-	-	-	1×1	0.5	5
CP02525	250×250×50	10	8	8	-	-	-	-	1×1	0.5	9
CP02530	300×250×50	10	8	8	-	-	-	-	1×1	0.5	10
CP03030	300×300×50	12	10	10	-	-	-	-	1×1	0.5	16
CP03035	350×300×50	12	10	10	-	-	-	-	1×1	0.5	17
CP03040	400×300×60	12	10	10	-	-	-	-	1×1	0.5	18
CP03045	450×300×60	15	12	10	-	-	-	-	1×1	0.5	17
CP03540	400×350×60	15	12	10	-	-	-	-	1×1	1	22
CP04545	450×450×75	15	11	10	-	-	-	-	2×2	1.6	35
CP04560	600×450×100	15	12	10	-	-	-	-	1×1	2	57
CP05050	500×500×75	15	11	8	-	-	-	-	2×2	1.6	42
CP05075	750×500×100	15	15	13	-	-	-	-	1×2	4	94
CP06060	600×600×100	15	13	10	-	-	-	-	2×2	2	75
CP06090	900×600×100	15	14	13	-	-	-	-	1×2	4	120

Base Elements
Clamp Units
Clamping Parts
Machine Vises
Drilling Vises
Vibration Isolation
Surface Plates and Measurement Instruments
Index

Size Chart

No.	A×B×C	D	E	F	G	H	I	J	Number of Ribs	Maximum Allowable Load (kN)	Weight (kg)
CP07510	1000×750×125	18	23	16	50	-	-	-	2×3	8	277
CP09090	900×900×125	15	25	20	50	-	-	-	2×2	8	260
CP09012	1200×900×125	18	25	20	50	-	-	-	2×2	8	365
CP09018	1800×900×150	22	25	20	50	-	-	-	2×2	8	591
CP10010	1000×1000×125	18	25	20	50	-	-	-	2×2	8	355
CP10012	1200×1000×150	18	25	20	50	-	-	-	2×3	8	469
CP10015	1500×1000×150	18	25	20	50	-	-	-	2×3	8	555
CP10020	2000×1000×150	22	25	20	50	-	-	-	2×3	8	774
CP12012	1200×1200×150	22	20	15	-	-	-	-	3×3	12.5	512
CP12018	1800×1200×175	20	20	15	-	-	-	-	3×4	12.5	715
CP12024	2400×1200×200	35	30	18	-	-	-	-	3×7	16	1650
CP15030	3000×1500×250	42	35	20	-	-	-	-	3×6	25	2820
CP20020	2000×2000×320	40	35	25	100	20	100	9	3×3	25	2700
CP20030	3000×2000×270	45	40	25	-	20	100	8	4×6	25	4220

Specifications

Machined Finish				Grade B Scraping				Grade A Scraping			
Order No.	No.	Flatness: K		Order No.	No.	Flatness: K		Order No.	No.	Flatness: K	
40684	**CP02020M**	0.029		**40721**	**CP02020B**	0.019		**40758**	**CP02020A**	0.010	
40685	**CP02525M**	0.033		**40722**	**CP02525B**	0.022		**40759**	**CP02525A**	0.011	
40686	**CP02530M**	0.036		**40723**	**CP02530B**	0.023		**40760**	**CP02530A**	0.012	
40687	**CP03030M**	0.038		**40724**	**CP03030B**	0.025		**40761**	**CP03030A**	0.012	
40688	**CP03035M**	0.041		**40725**	**CP03035B**	0.026		**40762**	**CP03035A**	0.013	
40689	**CP03040M**	0.043		**40726**	**CP03040B**	0.028		**40763**	**CP03040A**	0.014	
40690	**CP03045M**	0.046		**40727**	**CP03045B**	0.030		**40764**	**CP03045A**	0.015	
40691	**CP03540M**	0.045		**40728**	**CP03540B**	0.029		**40765**	**CP03540A**	0.015	
40692	**CP04545M**	0.052		**40729**	**CP04545B**	0.033		**40766**	**CP04545A**	0.016	
40693	**CP04560M**	0.060		**40730**	**CP04560B**	0.038		**40767**	**CP04560A**	0.019	
40694	**CP05050M**	0.057		**40731**	**CP05050B**	0.036		**40768**	**CP05050A**	0.018	
40695	**CP05075M**	0.070		**40732**	**CP05075B**	0.046		**40769**	**CP05075A**	0.022	
40696	**CP06060M**	0.066		**40733**	**CP06060B**	0.042		**40770**	**CP06060A**	0.021	
40697	**CP06090M**	0.082		**40734**	**CP06090B**	0.051		**40771**	**CP06090A**	0.026	
40698	**CP07510M**	0.096		**40735**	**CP07510B**	0.060		**40772**	**CP07510A**	0.030	
40699	**CP09090M**	0.095		**40736**	**CP09090B**	0.059		**40773**	**CP09090A**	0.029	
40700	**CP09012M**	0.110		**40737**	**CP09012B**	0.068		**40774**	**CP09012A**	0.034	
40701	**CP09018M**	0.144		**40738**	**CP09018B**	0.088		**40775**	**CP09018A**	0.044	
40702	**CP10010M**	0.104		**40739**	**CP10010B**	0.065		**40776**	**CP10010A**	0.032	
40703	**CP10012M**	0.115		**40740**	**CP10012B**	0.070		**40777**	**CP10012A**	0.035	
40704	**CP10015M**	0.130		**40741**	**CP10015B**	0.080		**40778**	**CP10015A**	0.040	
40705	**CP10020M**	0.159		**40742**	**CP10020B**	0.097		**40779**	**CP10020A**	0.049	
40706	**CP12012M**	0.123		**40743**	**CP12012B**	0.076		**40780**	**CP12012A**	0.038	
40707	**CP12018M**	0.154		**40744**	**CP12018B**	0.095		**40781**	**CP12018A**	0.047	
40708	**CP12024M**	0.189		**40745**	**CP12024B**	0.115		**40782**	**CP12024A**	0.058	
40709	**CP15030M**	0.233		**40746**	**CP15030B**	0.142		**40783**	**CP15030A**	0.071	
40711	**CP20020M**	0.198		**40748**	**CP20020B**	0.121		**40785**	**CP20020A**	0.061	
40712	**CP20030M**	0.250		**40749**	**CP20030B**	0.152		**40786**	**CP20030A**	0.076	

About the Maximum Allowable Load

The maximum allowable load is the value calculated and set based on a "loading calculation" under the following conditions. This should be used as a rough guide when selecting the surface plate.

- Load conditions: Load concentrated in the center
- Support conditions: Freely supported at both ends

No.E-165

Stands for Cast Iron Surface Plates

Material Rolled steel Structure Welded construction
Painting Position Steel on all faces

- Stand exclusively for cast iron surface plates.
- Surface plates can setup directly and quickly. (The surface plate alone cannot be finely adjusted)
  If you require fine adjustment of the surface place alone, a stand with leveling block can be custom made.
- Stoppers prevent the surface plate from shifting or falling.
- Surface plate height (C dimension adjustment) is possible by level adjustment using a foot jack.

CP09018-SA, CP10015-SA, CP10020-SA, CP12012-SA, CP12018-SA, CP12024-SA, CP15030-SA (6 legs)

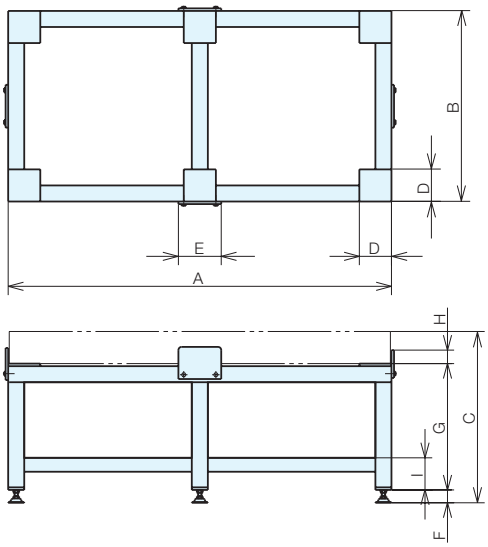

CP04560-SA, CP05075-SA, CP06060-SA, CP06090-SA, CP07510-SA, CP09090-SA, CP09012-SA, CP10010-SA, CP10012-SA (4 legs)

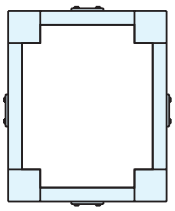

Base Elements
Clamp Units
Clamping Parts
Machine Vises
Drilling Vises
Vibration Isolation
Surface Plates and Measurement Instruments
Index

Specifications

Order No.	No.	Compatible Surface Plates	Surface Plate Size	A	B	C	D
40818	**CP04560-SA**	CP04560	600 × 450	610	460	800	125
115821	**CP05050-SA**	CP05050	500 × 500	510	510	800	150
40819	**CP05075-SA**	CP05075	750 × 500	760	510	800	150
40820	**CP06060-SA**	CP06060	600 × 600	610	610	800	150
40821	**CP06090-SA**	CP06090	900 × 600	910	610	800	150
40822	**CP07510-SA**	CP07510	1000 × 750	990	740	800	150
40823	**CP09090-SA**	CP09090	900 × 900	890	890	800	150
40824	**CP09012-SA**	CP09012	1200 × 900	1190	890	800	150
40825	**CP09018-SA**	CP09018	1800 × 900	1790	890	800	150
40826	**CP10010-SA**	CP10010	1000 × 1000	990	990	800	150
40827	**CP10012-SA**	CP10012	1200 × 1000	1190	990	800	150
40828	**CP10015-SA**	CP10015	1500 × 1000	1490	990	800	150
40829	**CP10020-SA**	CP10020	2000 × 1000	1990	990	800	150
40830	**CP12012-SA**	CP12012	1200 × 1200	1220	1220	800	150
40831	**CP12018-SA**	CP12018	1800 × 1200	1820	1220	800	150
40832	**CP12024-SA**	CP12024	2400 × 1200	2420	1220	800	150
40833	**CP15030-SA**	CP15030	3000 × 1500	3020	1520	800	150

No.	E	F	G	H	I	Foot Jack No.	No. of Foot Jacks	Weight (kg)
CP04560-SA	150	50 - 100	630	63	140	FJ16100	4	47
CP05050-SA	150	50 - 100	650	63	140	FJ16100	4	51
CP05075-SA	150	50 - 100	630	63	140	FJ16100	4	57
CP06060-SA	150	50 - 100	630	63	140	FJ16100	4	52
CP06090-SA	150	50 - 100	630	63	140	FJ16100	4	57
CP07510-SA	150	50 - 100	600	53	140	FJ16100	4	63
CP09090-SA	150	50 - 100	600	58	150	FJ16100	4	73
CP09012-SA	150	50 - 100	600	58	150	FJ16100	4	82
CP09018-SA	200	50 - 100	590	58	150	FJ16100	6	124
CP10010-SA	150	50 - 100	600	58	150	FJ16100	4	78
CP10012-SA	150	50 - 100	590	68	150	FJ16100	4	83
CP10015-SA	200	50 - 100	590	78	150	FJ16100	6	116
CP10020-SA	200	50 - 100	590	78	150	FJ16100	6	133
CP12012-SA	200	50 - 100	590	78	150	FJ16100	6	121
CP12018-SA	200	50 - 100	550	78	150	FJ16100	6	134
CP12024-SA	200	50 - 100	530	108	150	FJC16100	6	181
CP15030-SA	200	50 - 100	470	98	150	FJC16100	6	228

* Foot jack endurance load (FJ16100: 6 kN/unit, FJC16100: 17 kN/unit)

Base Elements
Clamp Units
Clamping Parts
Machine Vises
Drilling Vises
Vibration Isolation
Surface Plates and Measurement Instruments
Index

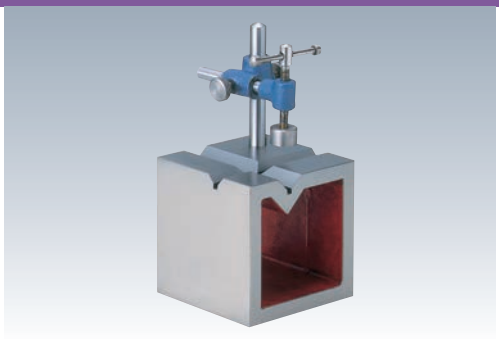

No.E-111

Box Vee Blocks

Material FC250(Main body, join fitting)
Steel (other)

Heat Treatment Annealing (FC250)

Used Surface Machined finish, hand scraped finish

- Useful for temporary fixing when measuring round materials.
- Can also be used as square type blocks.

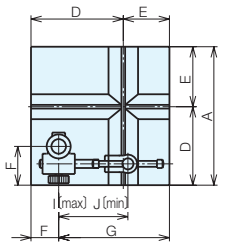

Perpendicularity of 4 faces to face a			
Perpendicularity of 4 faces to face b			
Perpendicularity of 4 faces to face c	Class A	(machined finish)	0.05
Parallelism of opposite face to face a	Class AA	(ground finish)	0.03
Parallelism of opposite face to face b	Class AAA	(hand scraped finish)	0.02
Parallelism of opposite face to face c			
Precision of X			

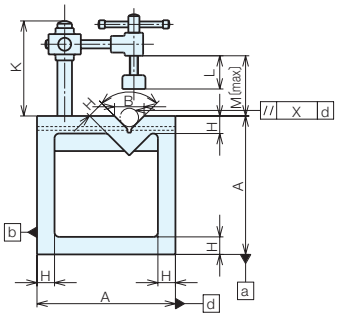

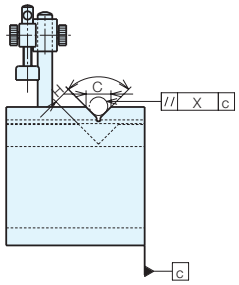

Size Chart

No.	A	B	C	D	E	F	G	H	I	J	K	L	M	Weight (kg)
100	100	20	18	60	40	24	76	13	80	45	100	25	57	4.1
125	125	26	20	80	45	30	95	15	90	45	110	25	67	7.8
150	150	32	27	100	50	36	114	19	119	50	130	43	84	13.5
200	200	38	32	136	64	55	145	25	194	50	170	43	128	27.0
250	250	46	37	174	76	65	185	32	219	52	250	64	199	49.5
300	300	60	50	205	95	80	220	38	244	52	300	64	249	79.0

Specifications

Machined Finish			Ground Finish			Hand scraped finish		
Order No.	No.		Order No.	No.		Order No.	No.	
01166	**AK100**		**01171**	**AA100**		**01178**	**AAA100**	
01167	**AK125**		**01172**	**AA125**		**01179**	**AAA125**	
01168	**AK150**		**01173**	**AA150**		**01180**	**AAA150**	
01169	**AK200**		**01174**	**AA200**		**01181**	**AAA200**	
-	-	-	**01175**	**AA250**		**01182**	**AAA250**	
-	-	-	**01176**	**AA300**		**01183**	**AAA300**	

Base Elements
Clamp Units
Clamping Parts
Machine Vises
Drilling Vises
Vibration Isolation
Surface Plates and Measurement Instruments
Index

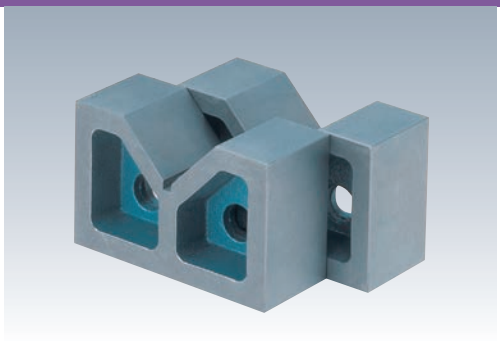

No.E-110

Vee Blocks Type B

Material FC250 Heat Treatment Annealing

- The pair difference in V grooves between 2 locating faces is 0.05 for MC, and 0.03 for GS and FS.

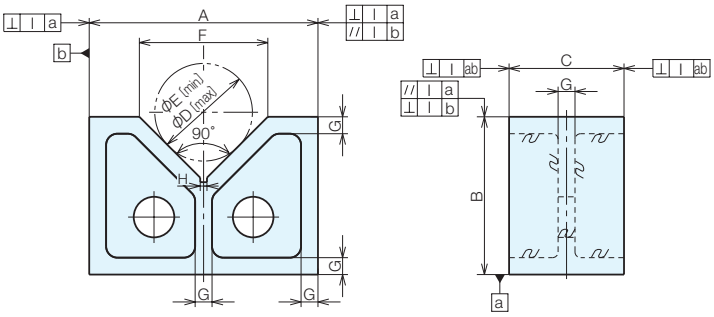

Size Chart

A×B×C	D	E	F	G	H	Weight (kg)
51×32×24	33	7	25	7	4	0.4
76×60×32	60	7	45	7	4	1.5
102×67×41	75	10	55	10	5	2.5
127×79×51	82	10	60	11	5	3.4
152×89×63	110	10	80	13	5	8.1
178×114×76	128	11	92	14	6	12.8
203×140×102	158	11	114	15	6	22.2
254×165×127	178	13	128	16	10	32.7
300×205×150	180	13	130	20	10	60.0

Specifications

Machined Finish				Ground Finish				Polished Finish			
Order No.	No.	I		Order No.	No.	I		Order No.	No.	I	
01205	**B 50**	0.05/100		**02527**	**BK 50**	0.03/100		**01215**	**BA 50**	0.01/100	
01206	**B 75**	0.05/100		**00005**	**BK 75**	0.03/100		**01216**	**BA 75**	0.01/100	
01207	**B100**	0.05/100		**00006**	**BK100**	0.03/100		**01217**	**BA100**	0.01/100	
01208	**B125**	0.05/100		**00007**	**BK125**	0.03/100		**01218**	**BA125**	0.01/100	
01209	**B150**	0.05/100		**00008**	**BK150**	0.03/100		**01219**	**BA150**	0.01/100	
01210	**B175**	0.05/100		**02528**	**BK175**	0.03/100		**01220**	**BA175**	0.01/100	
01211	**B200**	0.05/100		**00009**	**BK200**	0.03/100		**01221**	**BA200**	0.01/100	
01212	**B250**	0.05/100		**02529**	**BK250**	0.03/100		**01222**	**BA250**	0.01/100	
01213	**B300**	0.05/100		**00010**	**BK300**	0.03/100		**01223**	**BA300**	0.01/100	

Reference Pages

Base Elements
Clamp Units
Clamping Parts
Machine Vises
Drilling Vises
Vibration Isolation
Surface Plates and Measurement Instruments
Index

Basic Knowledge About Surface Plates

What are surface plates?

Surface plates are generally used as datum surface in the machining, assembly, and inspection of mechanical parts. Surface plates have a surface with a rectangular or square shape, and that surface is finished with a regular flat surface with a machine finish, hand scraped finish, or lapped finish.
In recent years, there has been demand for a wide variety of functions for applications such as various tests of vehicles, etc.

Material

Cast iron and granite are widely used as the material.

Cast Iron

Gray cast iron is widely used, with reinforcing by ribs on the back surface to reduce deformations.
Internal stress is relieved by heat treatment (annealing) in order to remove secular change after casting.

Granite

Granite, gabbro, and diabase are used, and offers features such as no rust, and no dents when scratched.
Gabbro (commonly called granite stone) in particular is mechanically superior because it is very hard and offers low variation with a fine structure.

<Physical properties of granite stone>

- Specific gravity: 2.9
- Water absorption: 0.03%
- Thermal conductivity: 2.14 W/m・k
- Linear expansion coefficient: 5.5×10^{-6}/° C

Mechanical properties

	Cast Iron (FC250)	Granite Stone
Young's modulus (kN/mm²)	110 - 130	60 - 100
Tensile strength (N/mm²)	* 250 or more	7 - 35
Compressive strength (N/mm²)	930 - 1080	100 - 300
Hardness	* HB241 or less	Hs70 - 102

* For as-cast diameter ϕ 30 test sample

Features of each surface plate

	Cast Iron	Granite
Wear resistance	○	◎
Corrosion resistance	△	◎
Attenuation rate	○	△
Repairability of flatness	○	△
Additional machining properties	◎	△
Effect of reducing linking	◎	○
Not affected by temperature changes	△	○

Accuracy Standards

When performing measuring work on surface plates, the "flatness" of the surface plate has an effect on the reliability of the measured values.
The flatness tolerance is categorized into grade 0, grade 1, grade 2, and grade 3 based on the JIS standards, and can be found from the following equation. (JIS B 7513)

$$t = C_1 \ell + C_2$$

t: Tolerance of flatness for the entire surface
ℓ : Nominal length (mm) of diagonal line of the surface plate rounded up to nearest 100 mm
C1 and C2: Constants for surface plate grades

Surface Plate Grade	C_1	C_2
0	0.003	2.5
1	0.006	5
2	0.012	10

* The length of the diagonal line is the value rounded up to the nearest 100 mm. Rounded up to nearest 0.5 μm for grades 0 and 00, and nearest 1 μm for grade 1.

Flatness

This represents the dimension of the minimum gap between the two planes when the used surface is sandwiched between two perfectly geometrically flat planes.
(JIS B 7513)

Schematic representation of flatness

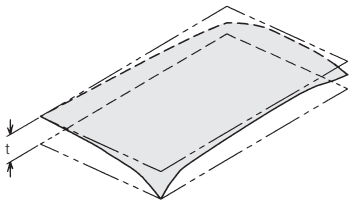

The flatness of each surface plate is based on the JIS standards.
Granite surface plates in particular are designated grade 00, which surpasses JIS grade 0.

Grade	JIS Standard		Grade 0	Grade 1	Grade 2		
	Inside the Company Standards	Grade 00			Grade A	Grade B	Machined Finish
Granite Surface Plates		○	○	○			
JIS Type Cast Iron Surface Plates			○	○	○		
Cast Iron Surface Plates					○	○	○
(Reference) Flatness of 600 × 600 (μm)		2.5	5	10	21	42	66

Base Elements
Clamp Units
Clamping Parts
Machine Vises
Drilling Vises
Vibration Isolation
Surface Plates and Measurement Instruments
Index

Used Surface Finish

Machined Finish

Milled finishes and hale finishes are performed by machining, and both give a finish with the same surface roughness. (Surface roughness 3.2 to 6.3 Ra)

・Milled finish: Cutting performed by rotational motion

・Hale finish: Cutting performed by linear motion

Machining grooves and holes can also be supported by machining tools.

Hand Scraped Finish

This is a manual process that is performed on a machined surface to obtain an even higher accuracy.
This finish is also used in surface plates and measurement instruments, and ensures a high grade of accuracy.
Hand scraped finish also offers the effect of reducing linking (sealing) with measuring instruments.

Hand scraped finish

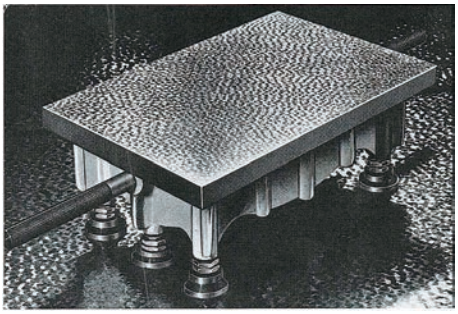

Rigidity

The rigidity of a surface plate is determined by the material and structure. The height, thickness, and arrangement and shape of ribs of surface plates all have an effect on the rigidity. In precision surface plates (JIS B 7513), rigidity is defined as follows.
"Having a rigidity such that the deformation of the loaded area does not exceed 1 μm per 200 N when a load is applied to the center of the surface plate used surface"
The rigidity of our surface plates and the position of the JIS standard are shown in a rigidity distribution diagram. (The evaluation differs for surface plates for testing)

Differences in rigidity between surface plates

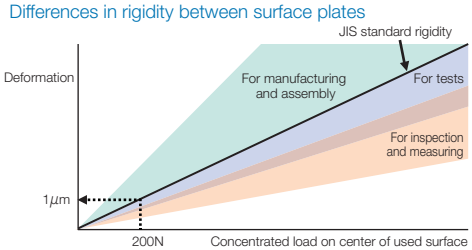

Example of internal structure of surface plate

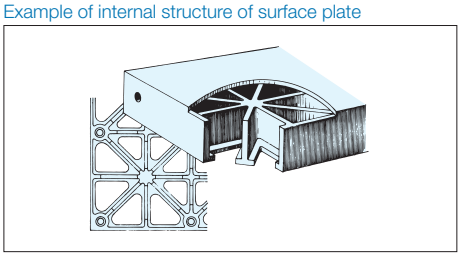

Maximum Allowable Load

The maximum allowable load is given as a guide when loading on the surface plate. The maximum allowable load for each surface plate is calculated based on the conditions in the following table.
Refer to this when loading on the surface plate. For surface plates for testing, the calculation method varies due to multipoint constraints.
(Maximum allowable load and endurance load mean the same thing)
Please note that the maximum allowable load is not a guarantee of flatness.

Surface Plates	Loading Calculation Diagram	Explanation of Symbols	Equation
For tests	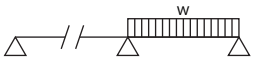	△ : Support point (surface plate jack point) w: Equally distributed load Converted to load per unit area or load per unit length after calculating W	σ : Tensile strength M: Bending moment Z: Cross section coefficient L: Support point distance $\sigma = M/Z$ $M = wL^2/8$
For inspection and measuring For manufacturing and assembly	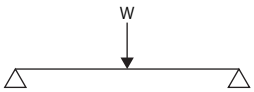	△ : Support point (surface plate length ends) W: Concentrated load	L: Support point distance L1 = L2 : L/2 Same as above for others M = W・L1・L2/L

Quality Control

Calibration rules are determined through national standards - inside the company standards - operational measurement instruments. Maintenance and management of measurement instrument accuracy and product quality are guaranteed. Calibration certificates can be issued upon request. (For a fee)

* Please inquire, as these cannot be issued for some models.

MEMO

Base Elements
Clamp Units
Clamping Parts
Machine Vises
Drilling Vises
Vibration Isolation
Surface Plates and Measurement Instruments
Index

Index

00001

00003	148
00005	179
00006	179
00007	179
00008	179
00009	179
00010	179
00011	148
00012	148
00013	148
00036	92
00079	143
00097	131
00111	93
00120	92
00219	11
00233	11
00234	11
00235	11
00236	11
00237	11
00379	144
00493	143
00494	143
00495	143
00499	143
00500	143
00514	146
00515	146
00516	146
00517	146
00518	146
00519	146
00520	146
00522	147
00523	147
00524	147
00525	147
00536	62
00537	62
00538	62

01000

01050	80
01051	80
01052	80
01053	80
01054	80
01055	80
01056	80
01057	80
01058	80
01059	80
01060	80
01061	80
01062	80
01063	80
01064	80
01065	80
01066	80
01067	80
01068	80
01069	80
01070	80
01071	80
01094	81
01095	81
01106	82
01108	91
01110	86
01112	88
01117	92
01118	81
01119	81
01120	81
01121	81
01122	81
01123	81
01124	81
01125	81
01126	81
01166	178
01167	178
01168	178
01169	178
01171	178
01172	178
01173	178
01174	178
01175	178
01176	178
01178	178
01179	178
01180	178
01181	178
01182	178
01183	178
01205	179
01206	179
01207	179
01208	179
01209	179
01210	179
01211	179
01212	179
01213	179
01215	179
01216	179
01217	179
01218	179
01219	179
01220	179
01221	179
01222	179
01223	179
01278	131
01993	82
01994	82
01995	82
01996	82
01997	82
01998	82
01999	82

02000

02000	82
02001	82
02002	82
02003	82
02004	82
02005	82
02006	82
02007	82
02008	82
02009	82
02010	82
02011	82
02012	82
02527	179
02528	179
02529	179
02571	91
02572	91
02581	91
02630	91
02631	91
02632	91
02633	91
02634	91
02635	91
02636	91
02637	91
02638	91
02639	91
02640	91
02641	91
02642	91
02643	91
02659	86
02660	86
02661	86
02662	86
02663	86
02664	86
02665	86
02666	86
02675	88
02676	88
02677	88
02678	88
02679	88
02680	88
02681	88
02682	88
02711	92
02712	92
02713	92
02714	92
02715	92
02716	92
02717	92
02718	92
02719	92
02720	92
02721	92
02722	92
02723	92
02724	92
02725	92
02726	92
02727	92
02728	92
02729	92
02730	92
02731	92
02732	92
02733	92
02734	92
02735	92
02736	92
02737	92
02738	92
02739	92
02740	92
02741	92
02742	92
02743	92
02744	92
02745	92
02746	92
02747	92
02748	92
02749	93
02750	93
02751	93
02752	93
02753	93
02754	93
02755	93
02756	93
02757	93
02758	93
02759	93
02760	93
02761	93
02762	93
02763	93
02764	93
02765	93
02766	93
02767	93
02768	93
02769	93
02770	93
02771	93
02772	93
02773	93
02774	93
02775	93
02776	93
02777	93
02778	93
02779	93
02780	93
02781	93
02782	93
02783	93
02784	93
02785	93
02786	93
02787	93
02788	93
02789	93
02790	93
02791	93
02792	93
02793	93
02794	93
02795	93
02796	93
02797	93
02798	93
02799	93
02800	93
02801	93
02802	93
02909	133

03000

03203	144
03204	144
03288	89
03289	89
03290	89
03291	89
03292	89
03293	89
03294	89
03295	89
03330	91
03331	91
03332	91
03333	91
03360	11
03361	11
03422	87
03423	87
03424	87
03425	87
03426	87
03427	87
03428	87
03429	87
03430	87
03431	90
03432	90
03433	90
03434	90
03435	90
03436	90
03437	90
03438	90
03439	90
03766	24
03767	24
03768	24
03769	24
03770	24
03771	24
03772	24
03773	24
03774	25
03775	25
03776	25
03777	25
03778	25
03779	25
03780	25
03781	25
03782	25

03783	25
03784	25
03785	25
03806	10
03807	10
03808	10
03809	10
10000	
10045	145
10665	83
10666	83
10667	83
10772	137
10840	137
14929	85
14930	85
14931	85
14932	85
14933	85
14934	85
14935	85
14936	85
14937	85
15817	91
16420	92
16421	92
16422	92
16423	92
16424	92
16425	92
16426	92
19567	89
19659	145
19660	145
19661	145
19772	137
19911	137
20000	
25179	91
25551	91
26922	26
26923	26
26924	26
26925	26
26926	26
26927	26
26928	26
26929	26
26930	26
26931	26
26932	26
26933	26
26934	26
26935	26
26936	26
26937	26
26938	26
26939	26
26940	26
26941	26
26942	26
26943	26
27331	62
29982	96
29983	96
29984	96
29985	96
29986	96
29987	96
29988	96
29989	96
29990	96
29991	97
29992	97
29993	97
29994	97
29995	97
29996	97
29997	95
30000	
30332	137
30333	137
30334	137
30335	137
30336	137
30337	137
30338	137
30339	137
30959	143
30960	143
30961	143
30962	143
30963	143
30968	148
30969	148
31358	63
31359	63
31360	63
31361	63
31362	63
31363	63
31364	63
31365	63
32101	112
32102	112
32103	112
32104	112
32105	112
32122	136
32123	136
32124	136
32125	136
32133	136
32134	136
32161	137
32162	137
32163	137
32164	137
32165	137
32166	137
32167	137
32168	137
32169	137
32170	137
32182	133
32183	133
32184	133
32185	133
32186	116
32187	116
32446	112
32447	112
32448	112
32449	112
32450	112
32451	116
32452	116
32558	91
32975	148
32976	148
32977	148
32978	148
32979	148
32980	148
32981	148
32982	148
32983	148
32984	148
32986	148
32987	148
32988	148
32989	148
32990	148
32991	148
32992	148
32993	148
32994	148
32995	148
32996	148
32999	148
33001	148
34597	131
34598	131
34610	97
34611	97
34612	97
34613	97
34614	97
34615	97
34616	97
34617	97
34618	97
34619	97
35724	97
35725	97
35726	97
35727	97
35728	97
35843	134
35844	134
35845	134
35846	134
35847	134
35849	134
35850	134
35852	134
35853	27
35854	135
35856	135
35857	135
35860	27
35862	27
35862	135
35863	135
35864	27
39331	91
40000	
40573	171
40574	171
40575	171
40576	171
40577	171
40578	171
40579	171
40580	171
40581	171
40582	171
40583	171
40584	171
40585	171
40586	171
40587	171
40588	171
40589	171
40590	171
40591	171
40592	171
40593	171
40594	171
40595	171
40596	171
40597	171
40598	171
40599	171
40600	171
40601	171
40602	171
40603	171
40604	171
40605	171
40606	171
40607	171
40608	171
40609	171
40610	171
40611	171
40612	171
40613	171
40614	171
40615	169
40616	169
40617	169
40618	169
40619	169
40620	169
40621	169
40622	169
40623	169
40624	169
40625	169
40626	169
40627	169
40628	169
40629	169
40630	169
40631	169
40633	169
40635	169
40636	169
40637	169
40638	169
40639	169
40640	169
40641	169
40642	169
40643	169
40644	169
40645	169
40646	169
40647	169
40648	169
40649	169
40650	169
40651	169
40653	169
40655	169
40656	169
40657	169
40658	169
40659	169
40660	169
40661	169
40662	169
40663	169
40664	169
40665	169
40666	169
40667	169
40668	169
40669	169
40670	169
40671	169
40673	169
40684	175
40685	175
40686	175
40687	175
40688	175
40689	175
40690	175
40691	175
40692	175
40693	175
40694	175
40695	175
40696	175
40697	175
40698	175
40699	175
40700	175
40701	175
40702	175
40703	175
40704	175
40705	175
40706	175
40707	175
40708	175

40709	175
40711	175
40712	175
40721	175
40722	175
40723	175
40724	175
40725	175
40726	175
40727	175
40728	175
40729	175
40730	175
40731	175
40732	175
40733	175
40734	175
40735	175
40736	175
40737	175
40738	175
40739	175
40740	175
40741	175
40742	175
40743	175
40744	175
40745	175
40746	175
40748	175
40749	175
40758	175
40759	175
40760	175
40761	175
40762	175
40763	175
40764	175
40765	175
40766	175
40767	175
40768	175
40769	175
40770	175
40771	175
40772	175
40773	175
40774	175
40775	175
40776	175
40777	175
40778	175
40779	175
40780	175
40781	175
40782	175
40783	175
40785	175
40786	175
40795	172
40796	172
40797	172
40798	172
40799	172
40800	172
40801	172
40802	172
40803	172
40804	172
40805	172
40809	173
40810	173
40811	173
40812	173
40813	173
40814	173
40815	173
40816	173
40817	173
40818	177
40819	177
40820	177
40821	177
40822	177
40823	177
40824	177
40825	177
40826	177
40827	177
40828	177
40829	177
40830	177
40831	177
40832	177
40833	177
41960	148
41961	148
41962	148
41963	148
41964	148
41965	148
41966	148
41967	148
41968	148
41969	148
41973	148
41974	148
41975	148
41976	148
41977	148
41979	148
41980	148
41981	148
41982	148
41983	148
41984	148
41985	148
41986	148
41987	148
41988	148
41989	148
43868	136
43869	136
43870	136
43871	136
43872	136
43889	63
43890	63
43891	63
43892	63
43893	145
43894	145
43895	145
43896	145
43897	145
43898	145
43899	145
43900	145
43901	145
43908	145
43909	143
43910	143
43911	143
43912	143
43913	143
43914	143
43915	143
43916	143
43917	143
43918	143
43967	135
43968	135
43969	135
46805	143
46860	118
46861	118
46862	119
46863	118
46864	118
46865	119
50000	
50581	89
50582	89
51944	88
51945	88
51946	88
51947	88
51959	136
51960	136
52056	114
52057	114
52058	110
52059	110
52060	110
52061	110
52062	110
52063	110
52064	110
52065	110
52066	110
52067	110
52068	110
52069	110
55470	137
55471	137
55665	132
55666	132
55667	132
55668	132
55669	132
55670	132
55671	132
55672	132
55673	132
55674	132
55675	132
55676	132
55677	132
55678	132
55679	132
55680	132
55681	132
55682	132
55683	132
55684	132
55685	132
55686	132
55687	132
55688	132
55689	132
55690	132
55691	132
55692	132
55693	132
55694	132
55695	132
55696	132
55697	132
55698	132
55699	132
55700	132
55701	132
55702	132
55703	132
55704	132
55705	132
55706	132
55707	132
55708	132
55709	132
55710	132
55958	136
59333	135
59334	135
60000	
62282	110
62283	110
62518	84
62519	84
62520	84
62521	84
62533	110
62534	110
62537	137
62538	137
66252	35
66253	35
66254	35
66255	31
66256	31
66257	31
66258	31
66259	31
66260	31
66261	31
66262	31
66263	31
66264	35
66265	35
66266	35
66310	136
66311	136
66312	136
66313	136
66314	136
66315	136
66316	136
67647	31
67648	31
67649	31
67650	35
67651	35
67819	120
68833	120
68836	36
68837	36
68838	36
68839	36
68840	36
68841	36
68842	36
68843	36
68844	36
68845	38
68846	38
68847	38
68848	38
68849	38
68850	38
68851	38
68852	38
68853	38
68854	38
68855	38
68856	38
68857	40
68858	40
68859	40
68860	40
68861	40
68865	40
68866	40
68867	40
68868	44
68869	44
68870	42
68871	42
68872	45
68873	45
68874	43
68875	43
69385	137
69386	137
69390	121
69398	171
69399	171
69400	171
69401	171
69402	171
69403	171

70000

70115	105
70116	105
70117	105
70118	105
70119	105
70120	105
71075	36
71076	36
71077	36
71078	38
71079	38
71081	38
71082	40
71083	40
76031	60
76032	60
76033	60
76034	60
76035	60
76036	60
76037	60
76038	60
76493	108
76494	108
76495	108
76496	108
76497	108
76498	108
76499	109
76500	109
76501	109
76502	109
76503	109
76504	109
78206	137
78207	137
78208	137
78209	137
78210	106
78211	106
78840	157
78841	157
78842	157
78843	157
78844	157

80000

80869	105
80870	105
83081	44
83082	45
83083	42
83084	43
84097	106
84098	106
84099	106
84100	106
84101	106
84125	41
84126	41
84127	41
84128	41
84129	41
84130	41
84131	41
84132	41
84582	137
84583	137
86025	105
86026	105
86027	105
86028	105
86029	105
86030	105
86031	105
86032	105
86033	105
86034	105
86420	108
86421	108
86422	109
86423	108
86424	108
86425	109
86426	108
86427	108
86428	109
86725	135
86726	135
87470	122
88807	126
88808	126
88809	126
88810	127

90000

91492	31
91493	31
91494	31
91495	31
91496	31
91497	31
91498	31
91499	31
91500	31
91501	31
91502	31
91503	31
91540	124
91541	122
91542	124
93017	122
93018	124
93019	126
93020	126
93021	126
93022	137
93023	127
95949	93
95950	93
95951	93
95952	93
95953	93
95954	93
95955	94
95956	94
95957	94
95958	94
95959	94
95960	94
95961	94
95962	94
95963	94
95964	94
95965	94
95975	88
95976	86
97234	135
97235	128
97236	128
97237	128
97238	129
97239	129
97240	129
97943	128
97944	128
97945	128
97946	129
98085	155
98086	155
98087	155
98088	155
98089	155
98090	153
98091	153
98092	153
98093	153
98094	153
98095	153
98096	153
98097	153
98098	153
98099	153
98100	154
98101	154
98102	154
98103	154
98104	154
98105	154
98106	154
98107	154
98108	154
98109	154

100000

100927	153
100968	70
101710	124
102931	153
105825	153
105826	153
105827	153
107666	68
107667	68
107668	68
107669	68
107670	68
107671	68
107672	68
107673	68
107674	68
107675	68
107676	68
107677	68
107678	68
107679	68
107694	70
107695	70
109148	69
109149	69
109150	69
109151	71
109152	71
109153	71
109154	71
109155	71
109156	71
109157	71
109158	71
109159	71
109160	71
109161	71
109162	71
109163	71
109164	71
109165	71
109166	71
109396	159
109397	159
109398	159
109399	159
109400	159
109401	159
109402	159
109403	159
109404	159
109405	159
109406	159
109407	159
109408	159
109409	159
109410	159
109411	159
109412	159
109413	159
109414	161
109415	161
109416	161
109417	161
109418	161
109419	161
109420	161
109421	161
109422	161
109423	161
109424	161
109425	161
109426	161
109427	161
109428	161
109429	161
109430	161
109431	161
109432	161
109433	161
109434	161
109435	161
109436	161
109437	161
109438	163
109439	163
109440	163
109441	163
109442	163
109443	163
109444	163
109445	163
109446	163
109771	34
109772	34
109773	34
109774	34
109775	32
109776	32
109777	32
109778	64
109779	64
109780	56
109781	57
109782	58
109783	59
109921	59

110000

110032	130
110033	130
110174	70
110442	70
113056	91
113057	91
113058	91
114333	64
114334	64
114460	56
114462	57
114464	58
114467	59
114468	59
114533	56
114536	57
114539	58
114543	59
114544	59
114595	32
114596	32
114597	32
114598	32
114993	70
114994	70
114995	70
114996	70
114997	68
114998	68
115028	13
115030	13
115031	13
115032	13
115033	13
115034	13
115035	13

115036	13	115082	13	115128	14	115174	17	115220	19	115266	19	115312	19
115037	13	115083	13	115129	14	115175	17	115221	19	115267	19	115313	19
115038	13	115084	13	115130	14	115176	17	115222	19	115268	19	115314	20
115039	13	115085	13	115131	14	115177	17	115223	19	115269	19	115315	20
115040	13	115086	13	115132	14	115178	17	115224	19	115270	19	115316	20
115041	13	115087	13	115133	14	115179	17	115225	19	115271	19	115317	20
115042	13	115088	13	115134	14	115180	17	115226	19	115272	19	115318	20
115043	13	115089	13	115135	14	115181	17	115227	19	115273	19	115319	20
115044	13	115090	13	115136	14	115182	17	115228	19	115274	19	115320	20
115045	13	115091	13	115137	14	115183	17	115229	19	115275	19	115321	20
115046	13	115092	13	115138	15	115184	17	115230	19	115276	19	115322	20
115047	13	115093	13	115139	15	115185	17	115231	19	115277	19	115323	20
115048	13	115094	13	115140	15	115186	17	115232	19	115278	19	115324	20
115049	13	115095	13	115141	15	115187	17	115233	19	115279	19	115325	20
115050	13	115096	13	115142	15	115188	17	115234	19	115280	19	115326	20
115051	13	115097	13	115143	15	115189	17	115235	19	115281	19	115327	20
115052	13	115098	13	115144	15	115190	17	115236	19	115282	19	115328	20
115053	13	115099	13	115145	15	115191	17	115237	19	115283	19	115329	20
115054	13	115100	13	115146	15	115192	17	115238	19	115284	19	115330	20
115055	13	115101	13	115147	15	115193	17	115239	19	115285	19	115331	20
115056	13	115102	13	115148	15	115194	17	115240	19	115286	19	115332	20
115057	13	115103	13	115149	15	115195	17	115241	19	115287	19	115333	20
115058	13	115104	13	115150	15	115196	17	115242	19	115288	19	115334	21
115059	13	115105	13	115151	15	115197	17	115243	19	115289	19	115335	21
115060	13	115106	13	115152	15	115198	17	115244	19	115290	19	115336	21
115061	13	115107	13	115153	17	115199	17	115245	19	115291	19	115337	21
115062	13	115108	13	115154	17	115200	17	115246	19	115292	19	115338	21
115063	13	115109	13	115155	17	115201	17	115247	19	115293	19	115339	21
115064	13	115110	13	115156	17	115202	17	115248	19	115294	19	115340	21
115065	13	115111	13	115157	17	115203	17	115249	19	115295	19	115341	21
115066	13	115112	13	115158	17	115204	17	115250	19	115296	19	115342	21
115067	13	115113	13	115159	17	115205	17	115251	19	115297	19	115343	21
115068	13	115114	13	115160	17	115206	17	115252	19	115298	19	115344	21
115069	13	115115	13	115161	17	115207	17	115253	19	115299	19	115345	21
115070	13	115116	13	115162	17	115208	17	115254	19	115300	19	115346	21
115071	13	115117	13	115163	17	115209	17	115255	19	115301	19	115347	21
115072	13	115118	13	115164	17	115210	19	115256	19	115302	19	115348	21
115073	13	115119	13	115165	17	115211	19	115257	19	115303	19	115349	21
115074	13	115120	13	115166	17	115212	19	115258	19	115304	19	115350	21
115075	13	115121	14	115167	17	115213	19	115259	19	115305	19	115351	21
115076	13	115122	14	115168	17	115214	19	115260	19	115306	19	115352	22
115077	13	115123	14	115169	17	115215	19	115261	19	115307	19	115353	22
115078	13	115124	14	115170	17	115216	19	115262	19	115308	19	115354	22
115079	13	115125	14	115171	17	115217	19	115263	19	115309	19	115355	22
115080	13	115126	14	115172	17	115218	19	115264	19	115310	19	115356	22
115081	13	115127	14	115173	17	115219	19	115265	19	115311	19	115357	22

115358	22
115359	23
115360	23
115361	23
115362	23
115363	23
115364	23
115365	23
115366	23
115367	23
115368	23
115369	23
115370	23
115371	23
115372	23
115373	23
115374	23
115375	23
115376	23
115377	23
115378	23
115379	23
115380	23
115381	23
115382	23
115383	23
115384	23
115385	23
115386	23
115387	23
115388	23
115389	23
115390	23
115391	23
115392	23
115393	23
115394	23
115395	23
115396	23
115397	23
115398	23
115399	23
115400	23
115401	23
115402	23
115403	23

115404	23
115405	23
115406	23
115407	23
115408	23
115409	23
115410	23
115411	23
115412	23
115413	23
115414	23
115647	145
115648	145
115649	145
115821	177

A

AA100 (01171) 178
AA125 (01172) 178
AA150 (01173) 178
AA200 (01174) 178
AA250 (01175) 178
AA300 (01176) 178
AAA100 (01178) 178
AAA125 (01179) 178
AAA150 (01180) 178
AAA200 (01181) 178
AAA250 (01182) 178
AAA300 (01183) 178
ABM08-06X100 (35724) 97
ABM08-06X125 (35725) 97
ABM08-06X150 (35726) 97
ABM08-06X175 (35727) 97
ABM08-06X200 (35728) 97
ABM08-10X100 (34610) 97
ABM08-10X125 (34611) 97
ABM08-10X150 (34612) 97
ABM08-10X175 (34613) 97
ABM08-10X200 (34614) 97
ABM08-12X100 (34615) 97
ABM08-12X125 (34616) 97
ABM08-12X150 (34617) 97
ABM08-12X175 (34618) 97
ABM08-12X200 (34619) 97
ABM08X100 (29991) 97
ABM08X125 (29992) 97
ABM08X150 (29993) 97
ABM08X175 (29994) 97
ABM08X200 (29995) 97
AK100 (01166) 178
AK125 (01167) 178
AK150 (01168) 178
AK200 (01169) 178

B

B100 (01207) 179
B125 (01208) 179
B150 (01209) 179
B175 (01210) 179
B200 (01211) 179
B250 (01212) 179
B300 (01213) 179
B50 (01205) 179
B75 (01206) 179
BA100 (01217) 179
BA125 (01218) 179
BA150 (01219) 179
BA175 (01220) 179
BA200 (01221) 179
BA250 (01222) 179
BA300 (01223) 179
BA50 (01215) 179
BA75 (01216) 179
BBH100D013 (109438) 163
BBH100D030 (109439) 163
BBH100D060 (109440) 163
BBH100D130 (109441) 163
BBH140D007 (109442) 163
BBH140D013 (109443) 163
BBH140D030 (109444) 163
BBH140D060 (109445) 163
BBH140M097 (109446) 163
BBL20D007 (109396) 159
BBL20D013 (109397) 159
BBL20D030 (109398) 159
BBL20M097 (109399) 159
BBL25D007 (109400) 159
BBL25D013 (109401) 159
BBL25D030 (109402) 159
BBL25M097 (109403) 159
BBL30D007 (109404) 159
BBL30D013 (109405) 159
BBL30D030 (109406) 159
BBL30M097 (109407) 159
BBL35D007 (109408) 159
BBL35D013 (109409) 159
BBL35D030 (109410) 159
BBL35M097 (109411) 159
BBL40D013 (109412) 159
BBL40D030 (109413) 159
BBM50D013BB (109422) 161
BBM50D013NB (109414) 161
BBM50D013NN (109430) 161
BBM50D030BB (109423) 161
BBM50D030NB (109415) 161
BBM50D030NN (109431) 161
BBM50D060BB (109424) 161
BBM50D060NB (109416) 161
BBM50D060NN (109432) 161
BBM50M097BB (109425) 161
BBM50M097NB (109417) 161
BBM50M097NN (109433) 161
BBM75D013BB (109426) 161
BBM75D013NB (109418) 161
BBM75D013NN (109434) 161
BBM75D030BB (109427) 161
BBM75D030NB (109419) 161
BBM75D030NN (109435) 161
BBM75D060BB (109428) 161
BBM75D060NB (109420) 161
BBM75D060NN (109436) 161
BBM75D130BB (109429) 161
BBM75D130NB (109421) 161
BBM75D130NN (109437) 161
BCS-14A (35853) 27
BCS-14B (35854) 135
BCS-14C (43967) 135
BCS-14Q1 (97234) 135
BCS-16B (35856) 135
BCS-16C (35857) 135
BCS-16F (35860) 27
BCS-16G (43968) 135
BCS-16H (59333) 135
BCS-18B (35862) 27
BCS-18B (35862) 135
BCS-18C (35863) 135
BCS-18D (35864) 27
BCS-18G (43969) 135
BCS-18H (59334) 135
BCS-18Q1 (86725) 135
BCS-18Q2 (86726) 135
BK100 (00006) 179
BK125 (00007) 179
BK150 (00008) 179
BK175 (02528) 179
BK200 (00009) 179
BK250 (02529) 179
BK300 (00010) 179
BK50 (02527) 179
BK75 (00005) 179
BM00850 (01117) 92
BM00875 (02711) 92
BM01050 (02716) 92
BM01075 (02717) 92
BM01250 (02723) 92
BM01275 (02724) 92
BM01450 (02730) 92
BM01475 (02731) 92
BM01675 (02741) 92
BM01875 (02754) 93
BM02075 (02767) 93
BM02275 (02780) 93
BM02475 (02792) 93
BM08100 (02712) 92
BM08125 (00036) 92
BM08150 (02713) 92
BM08175 (02714) 92
BM08200 (02715) 92
BM10100 (02718) 92
BM10125 (02719) 92
BM10150 (02720) 92
BM10175 (02721) 92
BM10200 (02722) 92
BM12100 (02725) 92
BM12125 (02726) 92
BM12150 (02727) 92
BM12175 (02728) 92
BM12200 (02729) 92
BM12225 (16420) 92
BM12250 (16421) 92
BM12300 (16422) 92
BM12350 (16423) 92
BM12400 (16424) 92
BM12450 (16425) 92
BM12500 (16426) 92
BM14100 (02732) 92
BM14125 (02733) 92
BM14150 (00120) 92
BM14175 (02734) 92
BM14200 (02735) 92
BM14225 (02736) 92
BM14250 (02737) 92
BM14300 (02738) 92
BM14350 (02739) 92
BM14400 (02740) 92
BM16100 (02742) 92
BM16125 (02743) 92
BM16150 (02744) 92
BM16175 (02745) 92

BM16200 (02746)	92
BM16225 (02747)	92
BM16250 (02748)	92
BM16300 (02749)	93
BM16350 (02750)	93
BM16400 (02751)	93
BM16450 (02752)	93
BM16500 (02753)	93
BM18100 (02755)	93
BM18125 (02756)	93
BM18150 (02757)	93
BM18175 (02758)	93
BM18200 (02759)	93
BM18225 (02760)	93
BM18250 (02761)	93
BM18300 (02762)	93
BM18350 (02763)	93
BM18400 (02764)	93
BM18450 (02765)	93
BM18500 (02766)	93
BM20100 (02768)	93
BM20125 (02769)	93
BM20150 (02770)	93
BM20175 (02771)	93
BM20200 (02772)	93
BM20225 (02773)	93
BM20250 (02774)	93
BM20300 (02775)	93
BM20350 (02776)	93
BM20400 (02777)	93
BM20450 (02778)	93
BM20500 (02779)	93
BM22100 (02781)	93
BM22125 (02782)	93
BM22150 (02783)	93
BM22175 (02784)	93
BM22200 (02785)	93
BM22250 (02786)	93
BM22300 (02787)	93
BM22350 (02788)	93
BM22400 (02789)	93
BM22450 (02790)	93
BM22500 (02791)	93
BM24100 (02793)	93
BM24125 (02794)	93
BM24150 (02795)	93
BM24175 (02796)	93
BM24200 (02797)	93
BM24250 (02798)	93
BM24300 (02799)	93
BM24350 (02800)	93
BM24400 (02801)	93
BM24450 (00111)	93
BM24500 (02802)	93
BM301000 (95965)	94
BM30200 (95949)	93
BM30250 (95950)	93
BM30300 (95951)	93
BM30350 (95952)	93
BM30400 (95953)	93
BM30450 (95954)	93
BM30500 (95955)	94
BM30550 (95956)	94
BM30600 (95957)	94
BM30650 (95958)	94
BM30700 (95959)	94
BM30750 (95960)	94
BM30800 (95961)	94
BM30850 (95962)	94
BM30900 (95963)	94
BM30950 (95964)	94
BML-03 (78840)	157
BML-05 (78841)	157
BML-10 (78842)	157
BML-25 (78843)	157
BML-50 (78844)	157
BMM040-L (98085)	155
BMM060-L (98086)	155
BMM100-L (98087)	155
BMM200-L (98088)	155
BMM270-L (98089)	155
BTS-12A (35843)	134
BTS-14A (35844)	134
BTS-16A (35845)	134
BTS-18A (35846)	134
BTS-18B (35847)	134
BTS-20A (35849)	134
BTS-20B (35850)	134
BTS-22A (35852)	134

C

CMG1612 (01058)	80
CMG1614 (01059)	80
CMG1814 (01060)	80
CMG1816 (01061)	80
CMG2016 (01062)	80
CMG2018 (01063)	80
CMG2218 (01064)	80
CMG2220 (01065)	80
CMG2418 (01066)	80
CMG2420 (01067)	80
CMG2620 (01068)	80
CMH1614 (01120)	81
CMH1816 (01121)	81
CMH2622 (01069)	80
CMH2822 (01070)	80
CMH2824 (01071)	80
CMM0108 (01050)	80
CMM1210 (01051)	80
CMM1410 (01052)	80
CMM1412 (01053)	80
CMM1612 (01054)	80
CMM1614 (01055)	80
CMM1814 (01056)	80
CMM1816 (01057)	80
CMR1412 (01094)	81
CMR1612 (01118)	81
CMR1614 (01119)	81
CNL016 (51944)	88
CNL020 (51945)	88
CNL022 (51946)	88
CNL024 (51947)	88
CNM0008 (01112)	88
CNM0010 (02675)	88
CNM0012 (02676)	88
CNM0014 (02677)	88
CNM0016 (02678)	88
CNM0018 (02679)	88
CNM0020 (02680)	88
CNM0022 (02681)	88
CNM0024 (02682)	88
CNM0030 (95975)	88
CP02020A (40758)	175
CP02020B (40721)	175
CP02020M (40684)	175
CP02525A (40759)	175
CP02525B (40722)	175
CP02525M (40685)	175
CP02530A (40760)	175
CP02530B (40723)	175
CP02530M (40686)	175
CP03030A (40761)	175
CP03030B (40724)	175
CP03030M (40687)	175
CP03035A (40762)	175
CP03035B (40725)	175
CP03035M (40688)	175
CP03040A (40763)	175
CP03040B (40726)	175
CP03040M (40689)	175
CP03045A (40764)	175
CP03045B (40727)	175
CP03045M (40690)	175
CP03540A (40765)	175
CP03540B (40728)	175
CP03540M (40691)	175
CP04545A (40766)	175
CP04545B (40729)	175
CP04545M (40692)	175
CP04560A (40767)	175
CP04560B (40730)	175
CP04560M (40693)	175
CP04560-SA (40818)	177
CP05050A (40768)	175
CP05050B (40731)	175
CP05050M (40694)	175
CP05050-SA (115821)	177
CP05075A (40769)	175
CP05075B (40732)	175
CP05075M (40695)	175
CP05075-SA (40819)	177
CP06060A (40770)	175
CP06060B (40733)	175
CP06060M (40696)	175
CP06060-SA (40820)	177
CP06090A (40771)	175
CP06090B (40734)	175
CP06090M (40697)	175
CP06090-SA (40821)	177
CP07510A (40772)	175
CP07510B (40735)	175
CP07510M (40698)	175
CP07510-SA (40822)	177
CP09012A (40774)	175

CP09012B (40737)	175
CP09012M (40700)	175
CP09012-SA (40824)	177
CP09018A (40775)	175
CP09018B (40738)	175
CP09018M (40701)	175
CP09018-SA (40825)	177
CP09090A (40773)	175
CP09090B (40736)	175
CP09090M (40699)	175
CP09090-SA (40823)	177
CP10010A (40776)	175
CP10010B (40739)	175
CP10010M (40702)	175
CP10010-SA (40826)	177
CP10012A (40777)	175
CP10012B (40740)	175
CP10012M (40703)	175
CP10012-SA (40827)	177
CP10015A (40778)	175
CP10015B (40741)	175
CP10015M (40704)	175
CP10015-SA (40828)	177
CP10020A (40779)	175
CP10020B (40742)	175
CP10020M (40705)	175
CP10020-SA (40829)	177
CP12012A (40780)	175
CP12012B (40743)	175
CP12012M (40706)	175
CP12012-SA (40830)	177
CP12018A (40781)	175
CP12018B (40744)	175
CP12018M (40707)	175
CP12018-SA (40831)	177
CP12024A (40782)	175
CP12024B (40745)	175
CP12024M (40708)	175
CP12024-SA (40832)	177
CP15030A (40783)	175
CP15030B (40746)	175
CP15030M (40709)	175
CP15030-SA (40833)	177
CP20020A (40785)	175
CP20020B (40748)	175
CP20020M (40711)	175
CP20030A (40786)	175
CP20030B (40749)	175
CP20030M (40712)	175

E

EPA100-4 (00519)	146
EPA100-OP-P (41988)	148
EPA100-SPR-P (41983)	148
EPA150-6 (00520)	146
EPA150-AJ (41976)	148
EPA150-AJ-P (41986)	148
EPA150-OP-P (41989)	148
EPA150-SPR-P (41984)	148
EPA75-3 (00518)	146
EPA75-AJ (41974)	148
EPA75-AJ-P (41985)	148
EPA75-OP-P (41987)	148
EPA75-SPR-P (41982)	148
ETPA100-4 (00525)	147
ETPA75-3 (00524)	147
ETS100-4 (00523)	147
ETS100-CR (32999)	148
ETS100-JA (30969)	148
ETS100-NB-BK (41964)	148
ETS100-NB-R (41968)	148
ETS75-3 (00522)	147
ETS75-CR (32996)	148
ETS75-HN (32984)	148
ETS75-JA (30968)	148
ETS75-NB-BK (41962)	148
ETS75-NB-R (41967)	148
EVS100-4 (00515)	146
EVS100-CB (32976)	148
EVS100-GB (32980)	148
EVS100-JA (00011)	148
EVS100-LR (32989)	148
EVS100-NB-BK (41963)	148
EVS150-6 (00516)	146
EVS150-AJ (41975)	148
EVS150-CB (32977)	148
EVS150-CR (33001)	148
EVS150-GB (32981)	148
EVS150-HN (32986)	148
EVS150-JA (00003)	148
EVS150-LR (32990)	148
EVS150-SPR (32993)	148
EVS150-TP (41979)	148
EVS200-8 (00517)	146
EVS200-CB (32978)	148
EVS200-CR (41960)	148
EVS200-GB (32982)	148
EVS200-HN (32987)	148
EVS200-JA (00013)	148
EVS200-LR (32991)	148
EVS200-NB-BK (41965)	148
EVS200-NB-R (41969)	148
EVS200-SPR (32994)	148
EVS200-TP (41980)	148
EVS75-3 (00514)	146
EVS75-AJ (41973)	148
EVS75-CB (32975)	148
EVS75-CR (32995)	148
EVS75-GB (32979)	148
EVS75-HN (32983)	148
EVS75-JA (00012)	148
EVS75-LR (32988)	148
EVS75-NB-BK (41961)	148
EVS75-NB-R (41966)	148
EVS75-SPR (32992)	148
EVS75-TP (41977)	148

F

FNM0008 (01110)	86
FNM0010 (02659)	86
FNM0012 (02660)	86
FNM0014 (02661)	86
FNM0016 (02662)	86
FNM0018 (02663)	86
FNM0020 (02664)	86
FNM0022 (02665)	86
FNM0024 (02666)	86
FNM0030 (95976)	86

G

GP02020-0 (69400)	171
GP02020-00 (69402)	171
GP02020-1 (69398)	171
GP02525-0 (69401)	171
GP02525-00 (69403)	171
GP02525-1 (69399)	171
GP03030-0 (40587)	171
GP03030-00 (40601)	171
GP03030-1 (40573)	171
GP03045-0 (40588)	171
GP03045-00 (40602)	171
GP03045-1 (40574)	171
GP04560-0 (40589)	171
GP04560-00 (40603)	171
GP04560-1 (40575)	171
GP04560-SA (40809)	173
GP05050-0 (40590)	171
GP05050-00 (40604)	171
GP05050-1 (40576)	171
GP05075-0 (40591)	171
GP05075-00 (40605)	171
GP05075-1 (40577)	171
GP05075-SA (40810)	173
GP06060-0 (40592)	171
GP06060-00 (40606)	171
GP06060-1 (40578)	171
GP06060-SA (40811)	173
GP06090-0 (40593)	171
GP06090-00 (40607)	171
GP06090-1 (40579)	171
GP06090-SA (40812)	173
GP07510-0 (40594)	171
GP07510-00 (40608)	171
GP07510-1 (40580)	171
GP07510-SA (40813)	173
GP09018-0 (40595)	171
GP09018-00 (40609)	171
GP09018-1 (40581)	171
GP09018-SA (40814)	173
GP10010-0 (40596)	171
GP10010-00 (40610)	171
GP10010-1 (40582)	171
GP10010-SA (40815)	173
GP10015-0 (40597)	171
GP10015-00 (40611)	171
GP10015-1 (40583)	171
GP10015-SA (40816)	173
GP10020-0 (40598)	171
GP10020-00 (40612)	171
GP10020-1 (40584)	171
GP10020-SA (40817)	173
GP15030-0 (40599)	171
GP15030-00 (40613)	171
GP15030-1 (40585)	171

GP20030-0 (40600)	171
GP20030-00 (40614)	171
GP20030-1 (40586)	171
GTM500-406HD (109148)	69
GTP1 (00219)	11
GTP2 (00233)	11
GTP3 (00234)	11
GTP4 (00235)	11
GTP400 (03806)	10
GTP5 (00236)	11
GTP500 (03807)	10
GTP6 (00237)	11
GTP630 (03808)	10
GTP7 (03360)	11
GTP8 (03361)	11
GTP800 (03809)	10
H	
HPA100SET (34597)	131
HPA125SET (34598)	131
HPA150SET (01278)	131
HPA200SET (00097)	131
I	
ICM0012 (10665)	83
ICM0016 (10666)	83
ICM0020 (10667)	83
ICQ12 (62518)	84
ICQ16 (62519)	84
ICQ20 (62520)	84
ICQ24 (62521)	84
J	
JP03030-0 (40655)	169
JP03030-1 (40635)	169
JP03030-2 (40615)	169
JP03040-0 (40656)	169
JP03040-1 (40636)	169
JP03040-2 (40616)	169
JP04040-0 (40657)	169
JP04040-1 (40637)	169
JP04040-2 (40617)	169
JP04063-0 (40658)	169
JP04063-1 (40638)	169
JP04063-2 (40618)	169
JP04063-SA (40795)	172
JP04560-0 (40659)	169
JP04560-1 (40639)	169
JP04560-2 (40619)	169
JP04560-SA (40796)	172
JP05050-0 (40660)	169
JP05050-1 (40640)	169
JP05050-2 (40620)	169
JP05075-0 (40661)	169
JP05075-1 (40641)	169
JP05075-2 (40621)	169
JP05075-SA (40797)	172
JP06060-0 (40662)	169
JP06060-1 (40642)	169
JP06060-2 (40622)	169
JP06060-SA (40798)	172
JP06310-0 (40664)	169
JP06310-1 (40644)	169
JP06310-2 (40624)	169
JP06310-SA (40800)	172
JP06363-0 (40663)	169
JP06363-1 (40643)	169
JP06363-2 (40623)	169
JP06363-SA (40799)	172
JP07510-0 (40665)	169
JP07510-1 (40645)	169
JP07510-2 (40625)	169
JP07510-SA (40801)	172
JP09012-0 (40666)	169
JP09012-1 (40646)	169
JP09012-2 (40626)	169
JP09012-SA (40802)	172
JP10010-0 (40667)	169
JP10010-1 (40647)	169
JP10010-2 (40627)	169
JP10010-SA (40803)	172
JP10015-0 (40668)	169
JP10015-1 (40648)	169
JP10015-2 (40628)	169
JP10015-SA (40804)	172
JP10016-0 (40669)	169
JP10016-1 (40649)	169
JP10016-2 (40629)	169
JP10016-SA (40805)	172
JP10020-0 (40670)	169
JP10020-1 (40650)	169
JP10020-2 (40630)	169
JP12024-0 (40671)	169
JP12024-1 (40651)	169
JP12024-2 (40631)	169
JP16025-0 (40673)	169
JP16025-1 (40653)	169
JP16025-2 (40633)	169
L	
LT100M (32101)	112
LT100MC (32186)	116
LT100MC-2 (46860)	118
LT100MC-3 (46861)	118
LT100MC-4 (46862)	119
LT100MCG (32451)	116
LT100M-JA (32161)	137
LT100M-SJ (32162)	137
LT100M-SV (32182)	133
LT125MG (32447)	112
LT125MG (32447)	112
LT125MG (32447)	112
LT125M-JA (32163)	137
LT125M-SJ (32164)	137
LT125M-SV (32183)	133
LT150L (52056)	114
LT150LG (52057)	114
LT150L-JA (55470)	137
LT150L-SJ (55471)	137
LT150M (32103)	112
LT150MC (32187)	116
LT150MC-2 (46863)	118
LT150MC-3 (46864)	118
LT150MC-4 (46865)	119
LT150MCG (32452)	116
LT150MG (32448)	112
LT150M-JA (32165)	137
LT150M-SJ (32166)	137
LT150M-SV (32184)	133
LT200M (32104)	112
LT200MG (32449)	112
LT200M-JA (32167)	137
LT200M-SJ (32168)	137
LT200M-SV (32185)	133
LT250M (32105)	112
LT250MG (32450)	112
LT250M-JA (32169)	137
LT250M-SJ (32170)	137
LT5AU-100 (87470)	122
LT5AU-100F (91540)	124
LT5AU-100FM (91542)	124
LT5AU-100JA (88810)	127
LT5AU-100M (91541)	122
LT5AU-100SJ-20 (88808)	126
LT5AU-100SJ-30 (88809)	126
LT5AU-100SJG-8 (88807)	126
LT5AU-100WST (88811)	127
LT5AU-75 (93017)	122
LT5AU-75F (93018)	124
LT5AU-75FM (101710)	124
LT5AU-75JA-32 (93022)	137
LT5AU-75JA-60 (93023)	127
LT5AU-75SJ-20 (93020)	126
LT5AU-75SJ-30 (93021)	126
LT5AU-75SJG-8 (93019)	126
LT630JV-JA (19772)	137
LT630JV-SJ (19911)	137
LTC-HJ150 (84097)	106
LTC-HJ200 (84098)	106
LTC-HJ250 (84099)	106
LTC-HJ300 (84100)	106
LTC-HJ350 (84101)	106
LTCV100 (70115)	105
LTCV100-2 (76493)	108
LTCV100-3 (76496)	108
LTCV100-4 (76499)	109
LTCV100H (70118)	105
LTCV100H-2 (86420)	108
LTCV100H-3 (86421)	108
LTCV100H-4 (86422)	109
LTCV100-JA (78206)	137
LTCV100S (86025)	105
LTCV100SH (86029)	105
LTCV125 (70116)	105
LTCV125-2 (76494)	108
LTCV125-3 (76497)	108
LTCV125-4 (76500)	109
LTCV125-400-4 (76502)	109
LTCV125H (70119)	105
LTCV125H-2 (86423)	108
LTCV125H-3 (86424)	108
LTCV125H-4 (86425)	109
LTCV125-JA (78207)	137
LTCV125S (86026)	105

LTCV125SH(86030)	105
LTCV160(70117)	105
LTCV160-2(76495)	108
LTCV160-3(76498)	108
LTCV160-4(76501)	109
LTCV160-500-4(76503)	109
LTCV160-630-4(76504)	109
LTCV160H(70120)	105
LTCV160H-2(86426)	108
LTCV160H-3(86427)	108
LTCV160H-4(86428)	109
LTCV160-JA(78208)	137
LTCV160S(86027)	105
LTCV160SH(86031)	105
LTCV160-SJ(78209)	137
LTCV-160TH(86033)	105
LTCV200(80869)	105
LTCV200H(80870)	105
LTCV200-JA(84582)	137
LTCV200S(86028)	105
LTCV200SH(86032)	105
LTCV200-SJ(84583)	137
LTCV-200TH(86034)	105
LTCV-FC(78210)	106
LTCV-RC(78211)	106
LTF-100JA(30332)	137
LTF-100SJ(30336)	137
LTF-125JA(30333)	137
LTF-125SJ(30337)	137
LTF-150JA(30334)	137
LTF-150SJ(30338)	137
LTF-175JA(30335)	137
LTF-175SJ(30339)	137
LTF-75JA(62537)	137
LTF-75SJ(62538)	137
LTFH125Q(52061)	110
LTFH125QG(52067)	110
LTFH150Q(52062)	110
LTFH150QG(52068)	110
LTFH175Q(52063)	110
LTFH175QG(52069)	110
LTFV100Q(62282)	110
LTFV100QG(62283)	110
LTFV-125H	130
LTFV125Q(52058)	110
LTFV125QG(52064)	110
LTFV-150H	130
LTFV150Q(52059)	110
LTFV150QG(52065)	110
LTFV175Q(52060)	110
LTFV175QG(52066)	110
LTGB10-18(55958)	136
LTGB12-14(66310)	136
LTGB12-16(66311)	136
LTGB12-18(32122)	136
LTGB14-14(66312)	136
LTGB14-16(43868)	136
LTGB14-18(32123)	136
LTGB16-14(66313)	136
LTGB16-16(43869)	136
LTGB16-18(32124)	136
LTGB18-14(66314)	136
LTGB18-16(43870)	136
LTGB18-18(32125)	136
LTGB20-14(66315)	136
LTGB20-16(43871)	136
LTGB20-18(32133)	136
LTGB22-14(66316)	136
LTGB22-16(43872)	136
LTGB22-18(32134)	136
LTGB24-18(51959)	136
LTGB28-18(51960)	136
LTH3P-125JA(10840)	137
LTH3P-125SJ(10772)	137
LTH3P-125SV(02909)	133
LTH3P-150S(67819)	120
LTH3P150S-ASSY(69390)	121
LTH3P-150SG(68833)	120
LTH3P150S-JA(69385)	137
LTH3P150S-SJ(69386)	137
LTQ-200HJ(62534)	110
LTQ-80HJ(62533)	110
LWC-04(76031)	60
LWC-06(76032)	60
LWC-08(76033)	60
LWC-12(76034)	60
LWCD-04(76035)	60
LWCD-06(76036)	60
LWCD-08(76037)	60
LWCD-12(76038)	60
M	
MC400P-50H(03774)	25
MC400P-75H(03775)	25
MC400P-75T(03766)	24
MC400P-90H(03776)	25
MC400P-90T(03767)	24
MC500P-50H(03777)	25
MC500P-75H(03778)	25
MC500P-75T(03768)	24
MC500P-90H(03779)	25
MC500P-90T(03769)	24
MC630P-100H(03782)	25
MC630P-100T(03771)	24
MC630P-50H(03780)	25
MC630P-75H(03781)	25
MC630P-75T(03770)	24
MC800P-110H(03785)	25
MC800P-110T(03773)	24
MC800P-50H(03783)	25
MC800P-75H(03784)	25
MC800P-75T(03772)	24
MHBL-R70C-32(114995)	70
MHBL-R70C-45(114996)	70
MHB-R50C-32(114994)	70
MHB-R70C-15(114993)	70
MHB-R70C-45(110442)	70
MR121A(114460)	56
MR121B(114462)	57
MR122(114464)	58
MR123L(114468)	59
MR123R(114467)	59
MSC304HD70(109151)	71
MSC306HD70(109152)	71
MSC308HD70(109153)	71
MSC310HD70(109154)	71
MSC404HD70(109155)	71
MSC406HD70(109156)	71
MSC408HD70(109157)	71
MSC410HD70(109158)	71
MSC504HD70(109159)	71
MSC506HD70(109160)	71
MSC508HD70(109161)	71
MSC510HD70(109162)	71
MSC606HD70(109163)	71
MSC608HD70(109164)	71
MT121A(109780)	56
MT121B(109781)	57
MT122(109782)	58
MT122A(114533)	56
MT122B(114536)	57
MT123(114539)	58
MT123L(109921)	59
MT123L3(114544)	59
MT123R(109783)	59
MT123R3(114543)	59
MTB304HD70S(107666)	68
MTB306HD70S(107667)	68
MTB308HD70S(107668)	68
MTB310HD70S(107669)	68
MTB404HD70S(107670)	68
MTB406HD70S(107671)	68
MTB408HD70S(107672)	68
MTB410HD70S(107673)	68
MTB504HD70S(107674)	68
MTB506HD70S(107675)	68
MTB508HD70S(107676)	68
MTB510HD70S(107677)	68
MTB606HD70S(107678)	68
MTB608HD70S(107679)	68
MTB-CS18(109165)	71
MTBP500HD70S(114997)	68
MTBP630HD70S(114998)	68
MT-SS110(109166)	71
MWS-R50-32(100968)	70
MWS-R76V-45(110174)	70
O	
OCP-1/4(10045)	145
OCP-1/4(41981)	148
P	
P150(00079)	143
P150A-SP(43910)	143
P150-BP(43915)	143
P150-JA(30959)	143
P150-SP(43909)	143
P250(00493)	143
P250A-SP(43912)	143
P250-BP(43916)	143
P250-JA(30960)	143
P250-SP(43911)	143
P300(00499)	143
P300-JA(30961)	143

P350 (00494)	143
P350-BP (43917)	143
P350-JA (30962)	143
P350-SP (46805)	143
P400 (00495)	143
P400A-SP (43914)	143
P400-BP (43918)	143
P400-JA (30963)	143
P400-SP (43913)	143
P770 (00500)	143
PCS0008 (29997)	95
PNM08 (29996)	97
PPC-1 (29988)	96
PPC-2 (29989)	96
PPC-3 (29990)	96
PSB-1 (29982)	96
PSB-2 (29983)	96
PSB-3 (29984)	96
PSC-1 (29985)	96
PSC-2 (29986)	96
PSC-3 (29987)	96
PV-0 (27331)	62
PV0-JA-A (31362)	63
PV0-JA-H (31358)	63
PV0-SP (43889)	63
PV-1 (00536)	62
PV1-JA-A (31363)	63
PV1-JA-H (31359)	63
PV1-SP (43890)	63
PV-2 (00537)	62
PV2-JA-A (31364)	63
PV2-JA-H (31360)	63
PV2-SP (43891)	63
PV-3 (00538)	62
PV3-JA-A (31365)	63
PV3-JA-H (31361)	63
PV3-SP (43892)	63

Q

QL03CB (71083)	40
QL03RB (71082)	40
QL07CB (68861)	40
QL07RB (68857)	40
QL10CB (68865)	40
QL10RB (68858)	40
QL16CB (68866)	40
QL16RB (68859)	40
QL25CB (68867)	40
QL25RB (68860)	40
QLA19CP (109773)	34
QLA19RP (109771)	34
QLA26CP (109774)	34
QLA26RP (109772)	34
QL-H0814 (84125)	41
QL-H1220 (84126)	41
QL-H1222 (84129)	41
QL-H1224 (84127)	41
QL-H1625 (84130)	41
QL-H1630 (84128)	41
QL-H1632 (84131)	41
QL-H1634 (84132)	41
QLHM03CP (71081)	38
QLHM03DP (71079)	38
QLHM03RP (71078)	38
QLHM07CP (68853)	38
QLHM07DP (68849)	38
QLHM07RP (68845)	38
QLHM10CP (68854)	38
QLHM10DP (68850)	38
QLHM10RP (68846)	38
QLHM16CP (68855)	38
QLHM16DP (68851)	38
QLHM16RP (68847)	38
QLHM25CP (68856)	38
QLHM25DP (68852)	38
QLHM25RP (68848)	38
QLSM03CP (71077)	36
QLSM03DP (71076)	36
QLSM03RP (71075)	36
QLSM07CP (68842)	36
QLSM07DP (68839)	36
QLSM07RP (68836)	36
QLSM10CP (68843)	36
QLSM10DP (68840)	36
QLSM10RP (68837)	36
QLSM16CP (68844)	36
QLSM16DP (68841)	36
QLSM16RP (68838)	36
QLT19CB (66252)	35
QLT19CP (66255)	31
QLT19DP (66258)	31
QLT19RB (66264)	35
QLT19RP (66261)	31
QLT26CB (66253)	35
QLT26CP (66256)	31
QLT26DP (66259)	31
QLT26RB (66265)	35
QLT26RP (66262)	31
QLT32CB (66254)	35
QLT32CP (66257)	31
QLT32DP (66260)	31
QLT32RB (66266)	35
QLT32RP (66263)	31
QLT40CB (67651)	35
QLT40CP (67649)	31
QLT40DP (67648)	31
QLT40RB (67650)	35
QLT40RP (67647)	31
QLTC26CP (109777)	32
QLTC26DP (109776)	32
QLTC26RP (109775)	32
QLTF19CP (91500)	31
QLTF19DP (91496)	31
QLTF19RP (91492)	31
QLTF26CP (91501)	31
QLTF26DP (91497)	31
QLTF26RP (91493)	31
QLTF32CP (91502)	31
QLTF32DP (91498)	31
QLTF32RP (91494)	31
QLTF40CP (91503)	31
QLTF40DP (91499)	31
QLTF40RP (91495)	31
QLTS26CPV (114595)	32
QLTS26RPV (114597)	32
QLTS40CPV (114596)	32
QLTS40RPV (114598)	32

S

SBP-0540 (26922)	26
SBP-0540T (26933)	26
SBP-0626 (26923)	26
SBP-0626T (26934)	26
SBP-0645 (26924)	26
SBP-0645T (26935)	26
SBP-0830 (26925)	26
SBP-0830T (26936)	26
SBP-0855 (26926)	26
SBP-0855T (26937)	26
SBP-0950 (26927)	26
SBP-0950T (26938)	26
SBP-0960 (26928)	26
SBP-0960T (26939)	26
SBP-1060 (26929)	26
SBP-1060T (26940)	26
SBP-1260 (26930)	26
SBP-1260T (26941)	26
SBP-1355 (26931)	26
SBP-1355T (26942)	26
SBP-1570 (26932)	26
SBP-1570T (26943)	26
SFNM08 (03422)	87
SFNM10 (03423)	87
SFNM12 (03424)	87
SFNM14 (03425)	87
SFNM16 (03426)	87
SFNM18 (03427)	87
SFNM20 (03428)	87
SFNM22 (03429)	87
SFNM24 (03430)	87
SSM1412 (01095)	81
SSM1612 (01122)	81
SSM1614 (01123)	81
SSM1814 (01124)	81
SSM1816 (01125)	81
SSM2016 (01126)	81
ST120F (107694)	70
ST200F (107695)	70
STB-1 (14929)	85
STB-2 (14930)	85
STB-3 (14931)	85
STB-4 (14932)	85
STB-5 (14933)	85
STB-6 (14934)	85
STB-7 (14935)	85
STB-8 (14936)	85
STB-9 (14937)	85
STC0101 (01106)	82
STC0102 (01993)	82
STC0103 (01994)	82
STC0201 (01995)	82
STC0202 (01996)	82
STC0203 (01997)	82
STC0301 (01998)	82

STC0302 (01999)	82
STC0303 (02000)	82
STC0401 (02001)	82
STC0402 (02002)	82
STC0403 (02003)	82
STC0501 (02004)	82
STC0502 (02005)	82
STC0503 (02006)	82
STC0601 (02007)	82
STC0602 (02008)	82
STC0603 (02009)	82
STC0701 (02010)	82
STC0702 (02011)	82
STC0703 (02012)	82
SW10M (03432)	90
SW12M (03433)	90
SW14M (03434)	90
SW16M (03435)	90
SW18M (03436)	90
SW20M (03437)	90
SW22M (03438)	90
SW24M (03439)	90
SW8M (03431)	90

T

TBL03-15035 (115352)	22
TBL03S-15028 (115153)	17
TBL04-20070 (115357)	22
TBL04-22065 (115355)	22
TBL04-22070 (115358)	22
TBL04-25055 (115353)	22
TBL04-25060 (115354)	22
TBL04-25065 (115356)	22
TBL04-25070 (115359)	23
TBL04S-17060 (115156)	17
TBL04S-17065 (115160)	17
TBL04S-17070 (115164)	17
TBL04S-20060 (115157)	17
TBL04S-20065 (115161)	17
TBL04S-20070 (115165)	17
TBL04S-22055 (115154)	17
TBL04S-22060 (115158)	17
TBL04S-22065 (115162)	17
TBL04S-22070 (115166)	17
TBL04S-25055 (115155)	17
TBL04S-25060 (115159)	17
TBL04S-25065 (115163)	17
TBL04S-25070 (115167)	17
TBL05-25075 (115366)	23
TBL05-25080 (115369)	23
TBL05-25085 (115372)	23
TBL05-25090 (115375)	23
TBL05-30065 (115362)	23
TBL05-30070 (115364)	23
TBL05-30075 (115367)	23
TBL05-30080 (115370)	23
TBL05-30085 (115373)	23
TBL05-30090 (115376)	23
TBL05-35055 (115360)	23
TBL05-35060 (115361)	23
TBL05-35065 (115363)	23
TBL05-35070 (115365)	23
TBL05-35075 (115368)	23
TBL05-35080 (115371)	23
TBL05-35085 (115374)	23
TBL05-35090 (115377)	23
TBL05S-20065 (115170)	17
TBL05S-20070 (115173)	17
TBL05S-20075 (115176)	17
TBL05S-20080 (115179)	17
TBL05S-20085 (115182)	17
TBL05S-20090 (115185)	17
TBL05S-22060 (115168)	17
TBL05S-22065 (115171)	17
TBL05S-22070 (115174)	17
TBL05S-22075 (115177)	17
TBL05S-22080 (115180)	17
TBL05S-22085 (115183)	17
TBL05S-22090 (115186)	17
TBL05S-25060 (115169)	17
TBL05S-25065 (115172)	17
TBL05S-25070 (115175)	17
TBL05S-25075 (115178)	17
TBL05S-25080 (115181)	17
TBL05S-25085 (115184)	17
TBL05S-25090 (115187)	17
TBL06-35090 (115384)	23
TBL06-35095 (115387)	23
TBL06-35100 (115390)	23
TBL06-40080 (115380)	23
TBL06-40085 (115382)	23
TBL06-40090 (115385)	23
TBL06-40095 (115388)	23
TBL06-40100 (115391)	23
TBL06-45070 (115378)	23
TBL06-45075 (115379)	23
TBL06-45080 (115381)	23
TBL06-45085 (115383)	23
TBL06-45090 (115386)	23
TBL06-45095 (115389)	23
TBL06-45100 (115392)	23
TBL06S-20090 (115191)	17
TBL06S-20095 (115194)	17
TBL06S-20100 (115197)	17
TBL06S-25085 (115189)	17
TBL06S-25090 (115192)	17
TBL06S-25095 (115195)	17
TBL06S-25100 (115198)	17
TBL06S-30080 (115188)	17
TBL06S-30085 (115190)	17
TBL06S-30090 (115193)	17
TBL06S-30095 (115196)	17
TBL06S-30100 (115199)	17
TBL08-40110 (115407)	23
TBL08-40120 (115411)	23
TBL08-45095 (115398)	23
TBL08-45100 (115401)	23
TBL08-45105 (115404)	23
TBL08-45110 (115408)	23
TBL08-45120 (115412)	23
TBL08-50085 (115394)	23
TBL08-50090 (115396)	23
TBL08-50095 (115399)	23
TBL08-50100 (115402)	23
TBL08-50105 (115405)	23
TBL08-50110 (115409)	23
TBL08-50120 (115413)	23
TBL08-55080 (115393)	23
TBL08-55085 (115395)	23
TBL08-55090 (115397)	23
TBL08-55095 (115400)	23
TBL08-55100 (115403)	23
TBL08-55105 (115406)	23
TBL08-55110 (115410)	23
TBL08-55120 (115414)	23
TBL08S-25120 (115205)	17
TBL08S-30110 (115201)	17
TBL08S-30120 (115206)	17
TBL08S-35110 (115202)	17
TBL08S-35120 (115207)	17
TBL08S-40100 (115200)	17
TBL08S-40110 (115203)	17
TBL08S-40120 (115208)	17
TBL08S-50110 (115204)	17
TBL08S-50120 (115209)	17
TBM5002-406HD (109149)	69
TBM6302-606HD (109150)	69
TBQ400T (83081)	44
TBQ400T-PL (83082)	45
TBQ400TS (83083)	42
TBQ400TS-PL (83084)	43
TBQ500T (68868)	44
TBQ500T-PL (68872)	45
TBQ500TS (68870)	42
TBQ500TS-PL (68874)	43
TBQ630T (68869)	44
TBQ630T-PL (68873)	45
TBQ630TS (68871)	42
TBQ630TS-PL (68875)	43
TBS03-15035 (115210)	19
TBS03-20035 (115211)	19
TBS03-20040 (115212)	19
TBS03S-15028 (115028)	13
TBS03S-15035 (115032)	13
TBS03S-17032 (115031)	13
TBS03S-20030 (115030)	13
TBS04-20045 (115213)	19
TBS04-20050 (115216)	19
TBS04-20055 (115219)	19
TBS04-20060 (115222)	19
TBS04-20065 (115225)	19
TBS04-20070 (115228)	19
TBS04-22045 (115214)	19
TBS04-22050 (115217)	19
TBS04-22055 (115220)	19
TBS04-22060 (11571)	19
TBS04-22065 (115226)	19
TBS04-22070 (115229)	19
TBS04-25045 (115215)	19
TBS04-25050 (115218)	19
TBS04-25055 (115221)	19
TBS04-25060 (115224)	19
TBS04-25065 (115227)	19
TBS04-25070 (115230)	19

TBS04S-15035 (115033)	13
TBS04S-15050 (115035)	13
TBS04S-15060 (115044)	13
TBS04S-17050 (115036)	13
TBS04S-17055 (115040)	13
TBS04S-17060 (115045)	13
TBS04S-17065 (115049)	13
TBS04S-17070 (115053)	13
TBS04S-20045 (115034)	13
TBS04S-20050 (115037)	13
TBS04S-20055 (115041)	13
TBS04S-20060 (115046)	13
TBS04S-20065 (115050)	13
TBS04S-20070 (115054)	13
TBS04S-22050 (115038)	13
TBS04S-22055 (115042)	13
TBS04S-22060 (115047)	13
TBS04S-22065 (115051)	13
TBS04S-25050 (115039)	13
TBS04S-25055 (115043)	13
TBS04S-25060 (115048)	13
TBS04S-25065 (115052)	13
TBS05-25055 (115231)	19
TBS05-25060 (115234)	19
TBS05-25065 (115237)	19
TBS05-25070 (115240)	19
TBS05-25075 (115243)	19
TBS05-25080 (115246)	19
TBS05-25085 (115248)	19
TBS05-25090 (115250)	19
TBS05-30055 (115232)	19
TBS05-30060 (115235)	19
TBS05-30065 (115238)	19
TBS05-30070 (115241)	19
TBS05-30075 (115244)	19
TBS05-30080 (115247)	19
TBS05-30085 (115249)	19
TBS05-35055 (115233)	19
TBS05-35060 (115236)	19
TBS05-35065 (115239)	19
TBS05-35070 (115242)	19
TBS05-35075 (115245)	19
TBS05S-20050 (115055)	13
TBS05S-20060 (115057)	13
TBS05S-20065 (115060)	13
TBS05S-20070 (115063)	13
TBS05S-22060 (115058)	13
TBS05S-22065 (115061)	13
TBS05S-22070 (115064)	13
TBS05S-25055 (115056)	13
TBS05S-25060 (115059)	13
TBS05S-25065 (115062)	13
TBS05S-25070 (115065)	13
TBS06-30060 (115251)	19
TBS06-30070 (115253)	19
TBS06-30075 (115257)	19
TBS06-30080 (115261)	19
TBS06-30085 (115265)	19
TBS06-30090 (115269)	19
TBS06-35070 (115254)	19
TBS06-35075 (115258)	19
TBS06-35080 (115262)	19
TBS06-35085 (115266)	19
TBS06-35090 (115270)	19
TBS06-35095 (115273)	19
TBS06-35100 (115276)	19
TBS06-40070 (115255)	19
TBS06-40075 (115259)	19
TBS06-40080 (115263)	19
TBS06-40085 (115267)	19
TBS06-40090 (115271)	19
TBS06-40095 (115274)	19
TBS06-40100 (115277)	19
TBS06-45060 (115252)	19
TBS06-45070 (115256)	19
TBS06-45075 (115260)	19
TBS06-45080 (115264)	19
TBS06-45085 (115268)	19
TBS06-45090 (115272)	19
TBS06-45095 (115275)	19
TBS06-45100 (115278)	19
TBS06S-20060 (115066)	13
TBS06S-20070 (115067)	13
TBS06S-20075 (115070)	13
TBS06S-20080 (115073)	13
TBS06S-20085 (115076)	13
TBS06S-20090 (115079)	13
TBS06S-20095 (115082)	13
TBS06S-20100 (115085)	13
TBS06S-25070 (115068)	13
TBS06S-25075 (115071)	13
TBS06S-25080 (115074)	13
TBS06S-25085 (115077)	13
TBS06S-25090 (115080)	13
TBS06S-25095 (115083)	13
TBS06S-25100 (115086)	13
TBS06S-30070 (115069)	13
TBS06S-30075 (115072)	13
TBS06S-30080 (115075)	13
TBS06S-30085 (115078)	13
TBS06S-30090 (115081)	13
TBS06S-30095 (115084)	13
TBS06S-30100 (115087)	13
TBS08-40070 (115279)	19
TBS08-40080 (115280)	19
TBS08-40085 (115284)	19
TBS08-40090 (115288)	19
TBS08-40095 (115292)	19
TBS08-40100 (115296)	19
TBS08-40105 (115300)	19
TBS08-40110 (115304)	19
TBS08-40120 (115308)	19
TBS08-45080 (115281)	19
TBS08-45085 (115285)	19
TBS08-45090 (115289)	19
TBS08-45095 (115293)	19
TBS08-45100 (115297)	19
TBS08-45105 (115301)	19
TBS08-45110 (115305)	19
TBS08-45120 (115309)	19
TBS08-50080 (115282)	19
TBS08-50085 (115286)	19
TBS08-50090 (115290)	19
TBS08-50095 (115294)	19
TBS08-50100 (115298)	19
TBS08-50105 (115302)	19
TBS08-50110 (115306)	19
TBS08-50120 (115310)	19
TBS08-55080 (115283)	19
TBS08-55085 (115287)	19
TBS08-55090 (115291)	19
TBS08-55095 (115295)	19
TBS08-55100 (115299)	19
TBS08-55105 (115303)	19
TBS08-55110 (115307)	19
TBS08-55120 (115311)	19
TBS08S-25080 (115088)	13
TBS08S-25085 (115092)	13
TBS08S-25090 (115096)	13
TBS08S-25095 (115101)	13
TBS08S-25100 (115105)	13
TBS08S-25110 (115110)	13
TBS08S-25120 (115114)	13
TBS08S-30080 (115089)	13
TBS08S-30085 (115093)	13
TBS08S-30090 (115097)	13
TBS08S-30095 (115102)	13
TBS08S-30100 (115106)	13
TBS08S-30110 (115111)	13
TBS08S-30120 (115115)	13
TBS08S-35080 (115090)	13
TBS08S-35085 (115094)	13
TBS08S-35090 (115098)	13
TBS08S-35095 (115103)	13
TBS08S-35100 (115107)	13
TBS08S-35110 (115112)	13
TBS08S-35120 (115116)	13
TBS08S-40080 (115091)	13
TBS08S-40085 (115095)	13
TBS08S-40090 (115099)	13
TBS08S-40095 (115104)	13
TBS08S-40100 (115108)	13
TBS08S-40110 (115113)	13
TBS08S-40120 (115117)	13
TBS08S-50090 (115100)	13
TBS08S-50100 (115109)	13
TBS08S-50120 (115118)	13
TBS10-50850 (115312)	19
TBS10-60105 (115313)	19
TBS10S-30080 (115120)	13
TBS10S-40070 (115119)	13
TGV04-20045 (115314)	20
TGV04-20055 (115316)	20
TGV04-25050 (115315)	20
TGV04-25055 (115317)	20
TGV04-25060 (115318)	20
TGV04S-15035 (115121)	14
TGV04S-15060 (115124)	14
TGV04S-20045 (115122)	14
TGV04S-25050 (115123)	14
TGV05-25055 (115319)	20
TGV05-25070 (115323)	20
TGV05-30055 (115320)	20
TGV05-30065 (115322)	20

TGV05-35055(115321)	20
TGV05S-20050(115125)	14
TGV05S-22060(115127)	14
TGV05S-25055(115126)	14
TGV05S-25070(115128)	14
TGV06-30060(115324)	20
TGV06-30075(115327)	20
TGV06-40070(115326)	20
TGV06-45060(115325)	20
TGV06-45075(115328)	20
TGV06S-20060(115129)	14
TGV06S-25070(115130)	14
TGV06S-25080(115132)	14
TGV06S-30070(115131)	14
TGV08-40070(115329)	20
TGV08-50080(115330)	20
TGV08-55090(115331)	20
TGV08S-30080(115133)	14
TGV08S-40080(115134)	14
TGV08S-50090(115135)	14
TGV10-50085(115332)	20
TGV10-60105(115333)	20
TGV10S-30080(115137)	14
TGV10S-40070(115136)	14
TNM1006(113056)	91
TNM1008(01108)	91
TNM1208(113057)	91
TNM1210(02571)	91
TNM1410(02572)	91
TNM1412(02581)	91
TNM1612(02630)	91
TNM1614(02631)	91
TNM1810(113058)	91
TNM1812(15817)	91
TNM1814(02632)	91
TNM1816(02633)	91
TNM2016(02634)	91
TNM2018(02635)	91
TNM2216(25179)	91
TNM2218(02636)	91
TNM2220(02637)	91
TNM2416(25551)	91
TNM2418(02638)	91
TNM2420(02639)	91
TNM2620(02640)	91
TNM2622(02641)	91
TNM2816(32558)	91
TNM2820(39331)	91
TNM2822(02642)	91
TNM2824(02643)	91
TNM3224(03330)	91
TNM3227(03331)	91
TNM3630(03332)	91
TNM4236(03333)	91
TPH04-20045(115334)	21
TPH04-20055(115336)	21
TPH04-25050(115335)	21
TPH04-25055(115337)	21
TPH04-25060(115338)	21
TPH04S-15035(115138)	15
TPH04S-15060(115141)	15
TPH04S-20045(115139)	15
TPH04S-25050(115140)	15
TPH05-25055(115339)	21
TPH05-25070(115343)	21
TPH05-30055(115340)	21
TPH05-30065(115342)	21
TPH05-35055(115341)	21
TPH05S-20050(115142)	15
TPH05S-22060(115144)	15
TPH05S-25055(115143)	15
TPH05S-25070(115145)	15
TPH06-30060(115344)	21
TPH06-30075(115347)	21
TPH06-40070(115346)	21
TPH06-45060(115345)	21
TPH06-45075(115348)	21
TPH06S-20060(115146)	15
TPH06S-25070(115147)	15
TPH06S-25080(115149)	15
TPH06S-30070(115148)	15
TPH08-40070(115349)	21
TPH08-50080(115350)	21
TPH08-55090(115351)	21
TPH08S-30080(115150)	15
TPH08S-40080(115151)	15
TPH08S-50090(115152)	15

U

UJB100(97238)	129
UJB75(97946)	129
UJR-8(97239)	129
UJRG-8(97240)	129
UJS100-R(97235)	128
UJS100-RG(97236)	128
UJS100-RRG(97237)	128
UJS75-R(97943)	128
UJS75-RG(97944)	128
UJS75-RRG(97945)	128
UP1630(55665)	132
UP1635(55666)	132
UP1640(55667)	132
UP1645(55668)	132
UP1650(55669)	132
UP1651(55670)	132
UP1652(55671)	132
UP1653(55672)	132
UP1654(55673)	132
UP1655(55674)	132
UP1656(55675)	132
UP1657(55676)	132
UP2140(55677)	132
UP2145(55678)	132
UP2150(55679)	132
UP2155(55680)	132
UP2160(55681)	132
UP2161(55682)	132
UP2162(55683)	132
UP2163(55684)	132
UP2164(55685)	132
UP2165(55686)	132
UP2167(55687)	132
UPS1630(55688)	132
UPS1635(55689)	132
UPS1640(55690)	132
UPS1645(55691)	132
UPS1650(55692)	132
UPS1651(55693)	132
UPS1652(55694)	132
UPS1653(55695)	132
UPS1654(55696)	132
UPS1655(55697)	132
UPS1656(55698)	132
UPS1657(55699)	132
UPS2140(55700)	132
UPS2145(55701)	132
UPS2150(55702)	132
UPS2155(55703)	132
UPS2160(55704)	132
UPS2161(55705)	132
UPS2162(55706)	132
UPS2163(55707)	132
UPS2164(55708)	132
UPS2165(55709)	132
UPS2167(55710)	132
UTS100-4(00379)	144
UTS100-CB(43894)	145
UTS100-CBA(115648)	145
UTS100-GB(43897)	145
UTS100-HR(43900)	145
UTS100-JA(19660)	145
UTS125-5(03204)	144
UTS125-CB(43895)	145
UTS125-CBA(115649)	145
UTS125-GB(43898)	145
UTS125-HR(43901)	145
UTS125-JA(19661)	145
UTS75-3(03203)	144
UTS75-CB(43893)	145
UTS75-CBA(115647)	145
UTS75-GB(43896)	145
UTS75-HR(43899)	145
UTS75-JA(19659)	145
UTS-HN(43908)	145

V

VCM0303E(109778)	64
VCM0303S(109779)	64
VCM-SB1(114333)	64
VCM-SB2(114334)	64
VLS3045-010L(98090)	153
VLS3045-020L(98091)	153
VLS3045-030L(98092)	153
VLS3045-070L(98093)	153
VLS3045-100L(98094)	153
VLS3045-SJ401(100927)	153
VLS3858-003L(98095)	153
VLS3858-010L(98096)	153
VLS3858-030L(98097)	153
VLS3858-070L(98098)	153
VLS3858-100L(98099)	153
VLS4560-030L(105825)	153
VLS4560-070L(105826)	153
VLS4560-100L(105827)	153

VLS4560-SH (102931)	153
VPG3545-003L (98100)	154
VPG3545-010L (98101)	154
VPG3545-030L (98102)	154
VPG3545-070L (98103)	154
VPG3545-100L (98104)	154
VPG4045-003L (98105)	154
VPG4045-010L (98106)	154
VPG4045-030L (98107)	154
VPG4045-070L (98108)	154
VPG4045-100L (98109)	154
W	
WF10 (03288)	89
WF12 (03289)	89
WF14 (03290)	89
WF16 (03291)	89
WF18 (03292)	89
WF20 (03293)	89
WF22 (03294)	89
WF24 (03295)	89
WF4 (50581)	89
WF6 (50582)	89
WF8 (19567)	89

MEMO

Base Elements
Clamp Units
Clamping Parts
Machine Vises
Drilling Vises
Vibration Isolation
Surface Plates and Measurement Instruments
Index

PROFILE

Company Profile

- Company name: Nabeya Co., Ltd.
- Head office: Wakasugicho 25, Gifu-shi, Gifu, 500-8743
  TEL +81-58-273-6521 FAX +81-58-278-0220
  URL: http://www.nabeya.co.jp E-mail: nabeya@ons.co.jp
- Established: 1560
- Capital: 98 millions JPY
- Employees: 180 persons
- Singapore sales company: ERON TOOLING PTE, LTD.
  564 Geylang Road, Singapore 389512
  TEL +65-6742-3741 FAX +65-6742-5945
  URL: http://www.erontool.com E-mail: sales@erontool.com
- China sales company: TOP-CEL INTERNATIONAL TRADING (SHANGHAI) CO.,LTD.
  308 Room, No.664 Xinhua Road, Shanghai, China 200052
  TEL +86-21-64413330, 64413332, 64280232, 64695982
  FAX +86-21-64695985
  URL: http://www.topcel.net E-mail: topcel@sh163.net

Main factory

Itonuki FA factory

SINCE 1560

Nabeya Co., Ltd.

ERON® MACHINE VISES & JIGS.

http://www.nabeya.co.jp E-mail:nabeya@ons.co.jp

Head office	Wakasugicho 25, Gifu-shi, Gifu, 500-8743 TEL +81-58-273-6521 FAX +81-58-278-0220
Singapore sales company	ERON TOOLING PTE, LTD. 564 Geylang Road, Singapore 389512 TEL +65-6742-3741 FAX +65-6742-5945 URL: http://www.erontool.com E-mail: sales@erontool.com
China sales company	TOP-CEL INTERNATIONAL TRADING (SHANGHAI) CO.,LTD. 308 Room, No.664 Xinhua Road, Shanghai, China 200052 TEL +86-21-64413330, 64413332, 64280232, 64695982 FAX +86-21-64695985 URL: http://www.topcel.net E-mail: topcel@sh163.net